GROUP OF COMPANIES

“TiSO-PRODUCTION” LTD

SERVO-OPERATED TRIPOD TURNSTILES

CENTURION-M

BASTION-M

SKULL-M

TWIX-M

OPERATION MANUAL

2018

CONTENTS

INTRODUCTION

This Operation Manual (hereinafter referred to as OM) covers the servo-operated turnstile (hereinafter referred to as the "turnstile"). The Operation Manual contains information about design, specifications, installation for proper operation and maintenance of the turnstile.

This Operation Manual is prepared in compliance with the specification requirements TY Y 31.6-32421280-004:2010.

The turnstile shall be serviced only by the qualified staff having the relevant class of permit to work with electrical facilities with voltage up to 1000 V and scrutinizing this Operation Manual, obtaining safety instructions and trained for operation and maintenance of the turnstile.

Reliability and durability of the turnstile operation is provided with observation of modes and conditions of transportation, storage, installation and operation. So, fulfillment of all requirements specified in this document is mandatory.

Due to regular improvement of the product its design can be modified without degradation of the product features and quality not covered by this Operation Manual.

Depending on the turnstile purpose and design features, the following pattern of reference designation is accepted:

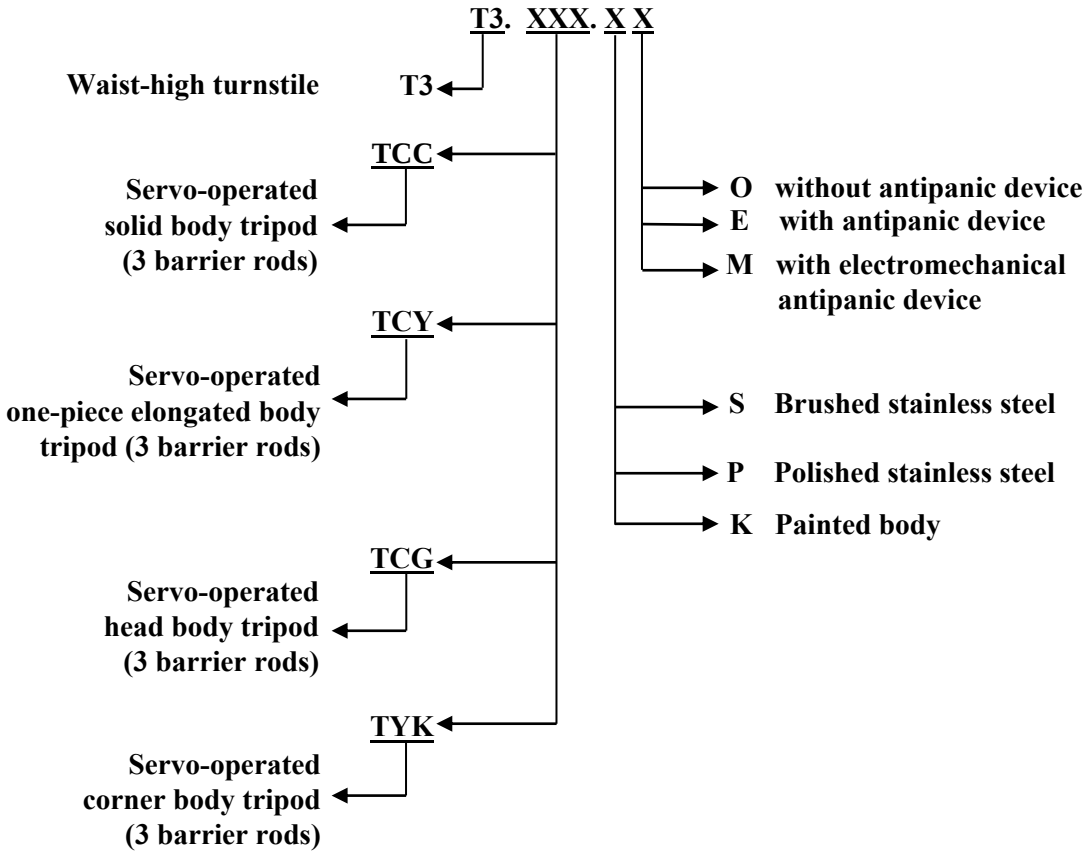

The tripod type turnstile reference designation is given in Table 1.

Table 1

Name	*Code*	*Designation*
CENTURION-M	T3.TCC.XE	AUIA.095 OM
BASTION-M	T3.TCY.XE	AUIA.097 OM
SKULL-M	T3.TCG.XE	AUIA.096 OM
TWIX-M	T3.TYK.XE	AUIA.137 OM

Example of reference designation of the servo-operated turnstile with solid body of brushed stainless steel when the turnstile T3.TCC.SE TY Y 31.6-32421280-004:2010 is ordered.

WARNINGS TO THE CUSTOMER ON SAFE OPERATION OF THE TURNSTILE

These warnings are designed for ensuring of safety during operation of the turnstile to prevent violation of safety characteristics by improper installation or operation. These warnings are aimed at drawing attention of the customer to safety problems.

GENERAL WARNINGS

The Operation Manual is an integral part of the product and it shall be handed over to the customer. The OM shall be kept for future use and consulted for clarifications if required. If the turnstile is resold, handed over to another owner or transported to another place, make sure that the OM is enclosed to the turnstile to be used by new owner and/or maintenance staff during installation and/or operation.

Safety measures and requirements specified in this OM must be observed:

- the turnstile must be connected to ground loop prior to operation;
- the turnstile to be connected to AC network with parameters specified in paragraph 1.2 "Specifications";
- inspection, adjustment and repair should be performed only after the turnstile is deenergized.

After purchasing of the turnstile it should be unpacked and its integrity should be checked. In case of doubt in integrity of the turnstile it should not be used and the customer should refer to the supplier or to the manufacturer.

Packing accessories (wooden pallet, nails, clips, polyethylene bags, cardboard etc.) as potential sources of hazard must be removed to unacceptable place prior to proper use of the turnstile.

As electric shock protection device the turnstile is related to 01 protection class according to GOST (State Standard) 12.2.007.0-75 and is not intended for operation in explosive and fire-hazardous areas by the "Rules for design of electrical installations".

Using of the turnstile for unintended purpose, improper installation, nonobservance of conditions of transportation, storage, installation and operation, specified by this OM, may result in damage to people, animals or property for which the manufacturer is not responsible.

1. DESCRIPTION AND OPERATION

1.1 General Information and Purpose

1.1.1 Turnstile purpose:

The turnstile is designed for arrangement of individual pedestrian access at access points of industrial enterprises, banks, stadiums, administrative facilities etc. driven by control signals of access control system (from keypad, proximity card readers) or manually (from wire control panel).

1.1.2 The turnstile dimensions and weight correspond to the values specified in Table 2.

Table 2

Designation of modification	*Dimensions, mm*			*Pedestal size, (LxW), m*	*Max.weight, kg*
	Height	*Length*	*Width*		
T3.TCC.XE	1000	793	847	324x332	40
T3.TCY.XE	1000	793	815	524x300	40
T3.TCG.XE	616	793	833	524x300	30
T3.TYK.XE	1000	1000	785	1004x270	80

1.1.3 The operation condition parameters according to GOST 15150-69 are specified in Table 3.

Table 3

Operation conditions	*For climatic modification*	*Parameter value*
Ambient air temperature	MC4	+1°C to +40°C
Relative air humidity		80 % at 20 ºC
Ambient air allowable pressure		84 to 106,7kPa
Transportation temperature range		- 40°C to + 50°C
Storage temperature range		+ 5°C to + 40°C
Group of mechanical application		L3
Altitude above sea level		up to 2000 m
Environment	MC4	Explosion-proof, does not contain current-conducting dust, aggressive gases and vapours in concentration destroying isolation and metals,

Continued Table 3

1	*2*	*3*
		disturbing normal operation of the equipment installed in turnstiles
Installation site		In enclosed spaces in the absence of direct impact of precipitations and solar radiation
Operating position		Vertical, deviation from vertical position no more than 1º to any side is acceptable

1.1.5 Reliability indices:

– mean time to repair (without delivery time of spare parts, tools and accessories) – at most 6 hours;
– mean time to failure – at least 1 500 000 accesses;
– mean service life between overhauls – at least 10 years.

1.2 Specifications

The key parameters of the turnstile are specified in Table 4.

Table 4

Parameter description	*Unit measure*	*Parameter value*
Minimum traffic flow capacity in free access mode	*man/min.*	60
Minimum traffic flow capacity in single access mode	*man/min.*	25
Maximum access way width	*mm*	600 mm
Power supply voltage:		
– AC power supply (primary)	*V* *Hz*	100 ÷ 240 ~ 50/60
– DC power supply (secondary)	*V*	12
Maximum power consumption	*W*	55
Index of protection according to EN 60529	-	IP41*

1.3 Configuration and Scope of Delivery

1.3.1 The servo-operated waist-high turnstile design includes the following key devices and components (*See Fig.1*):

Design, overall and installation dimensions of the turnstile are shown in Annex A.

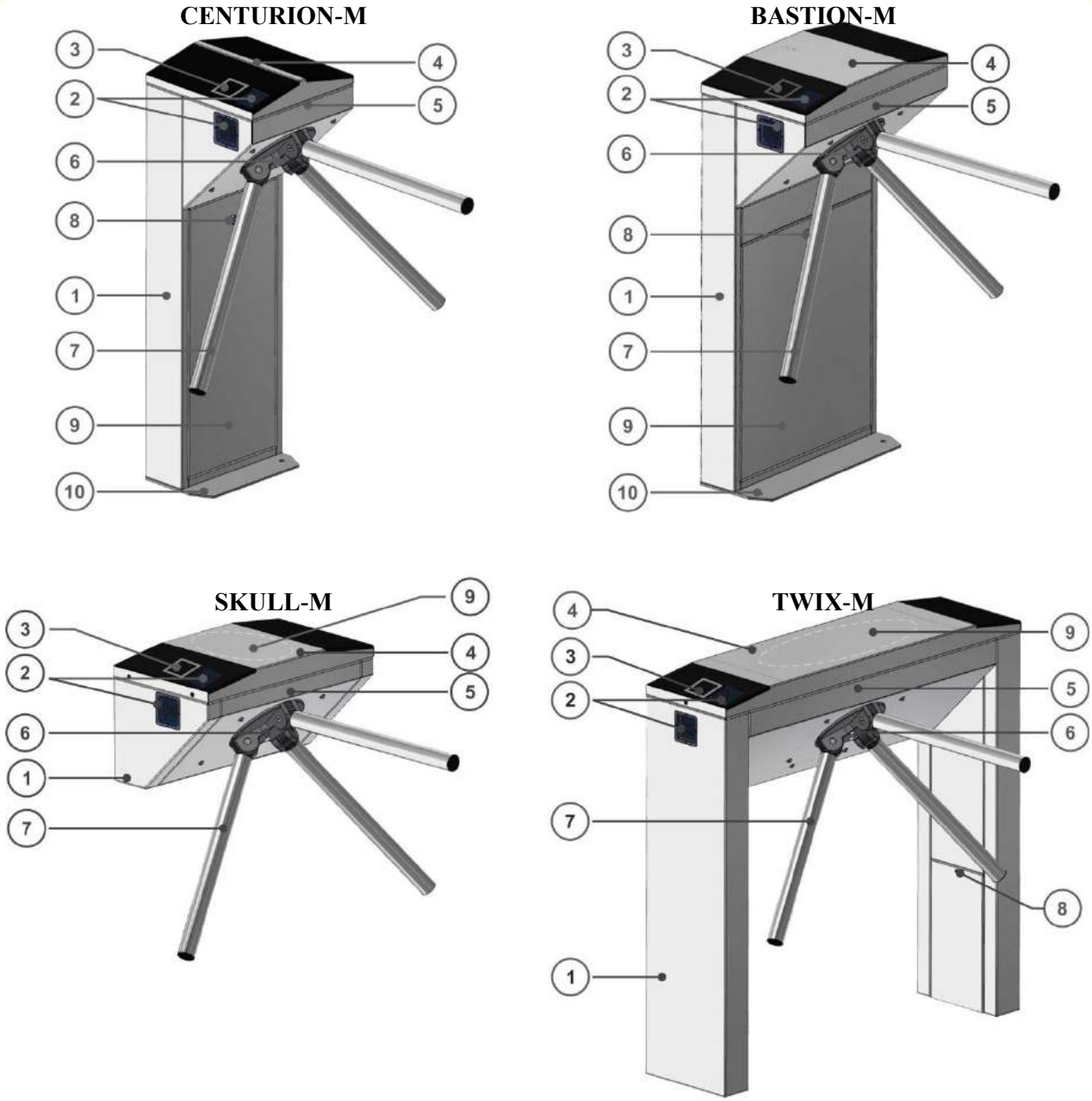

1 - turnstile rack;
2 - LED display;
3 - card reader location;
4 - upper lid;
5 - control mechanism;
6 - hub;
7 - barrier rod;
8 - lock door;
9 - control panel;
10 - footing.

Fig. 1 – Turnstile general appearance

The turnstile modifications are manufactured from:
– polished stainless steel (reference designation T3.TCC.PE).
– brushed stainless steel (reference designation T3.TCC.SE).
– carbon steel painted in any colour according to RAL (reference designation T3.TCC.KE);
The turnstile basic modification is made of brushed stainless steel.

1.3.2 Turnstile scope of delivery (standard):

- Tripod turnstile
- Control panel
- Anchors (4 pcs.)
- Data sheet
- Battery (capacity 4 Ah)[1]

For convenience of delivery the turnstile is supplied ready-to-install with dismounted barrier rods *(See Fig.2).*

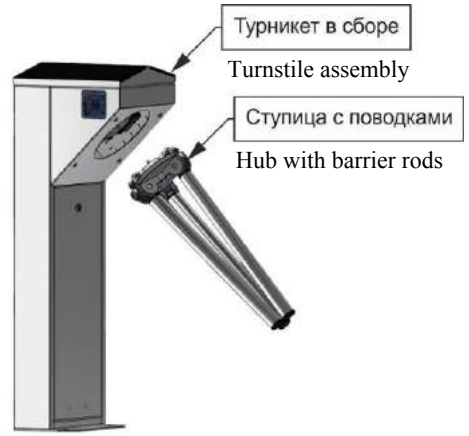

Fig.2. – Tripod turnstile scope of delivery

1.3.3 The turnstile design, overall and installation dimensions *(See Fig.3)*

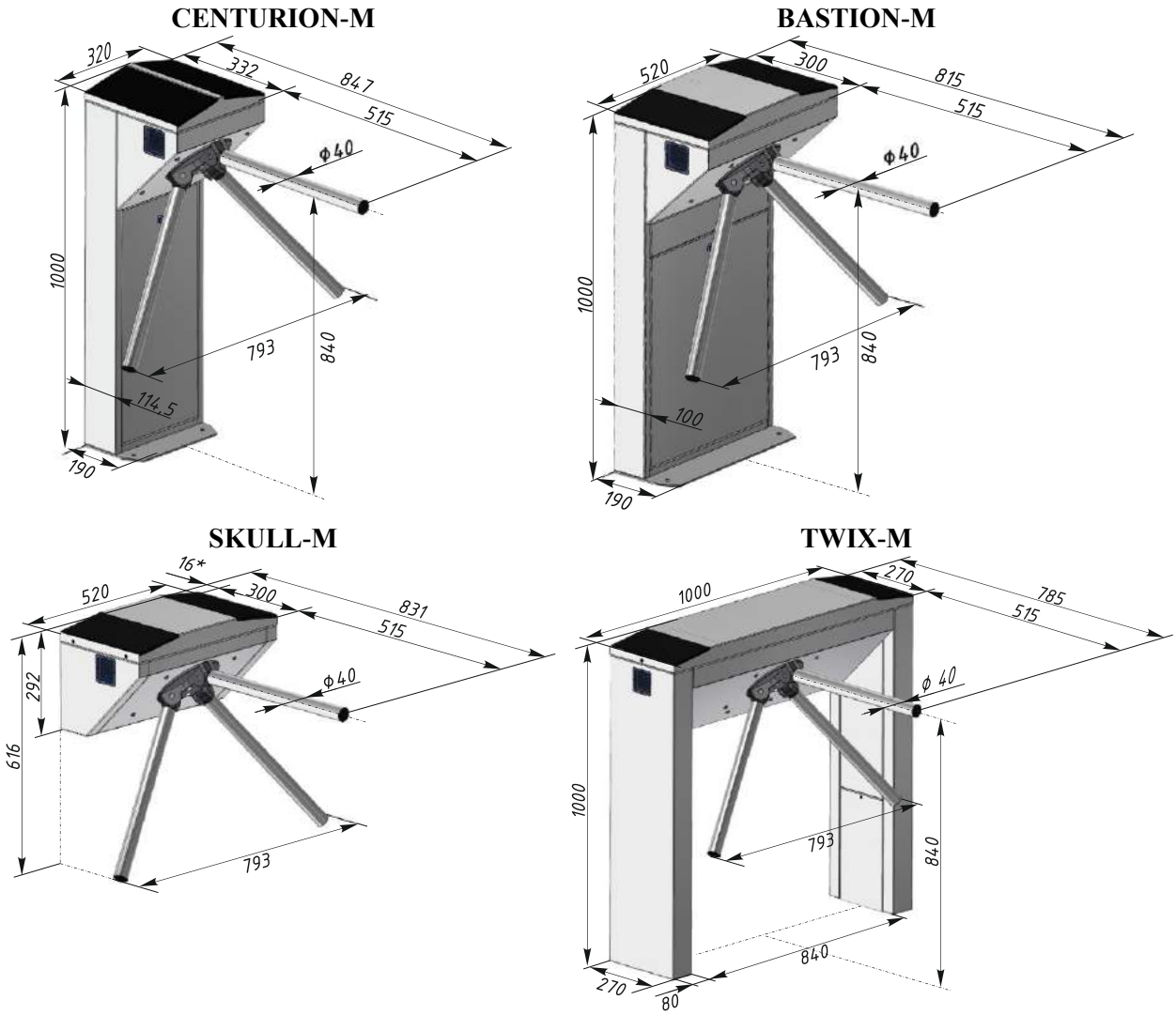

** Carrier sleeve size*

Fig. 3 - Tripod turnstile dimensions

[1] *Is not included in the turnstile scope of delivery - to be equipped by the custoner, if appropriate*

1.4 Design and operation

1.4.1 Turnstile design

1.4.1.1 The turnstile body is a metalware, which footing ***10*** (*See Fig.1*) is installed on an even surface by means of Redibolt anchors. The turnstile status is displayed by LED display boards ***2***, built in the turnstile body. The turnstile initial state is indicated by constantly lit red LED (*See Fig.4*): the turnstile access is locked in both directions.

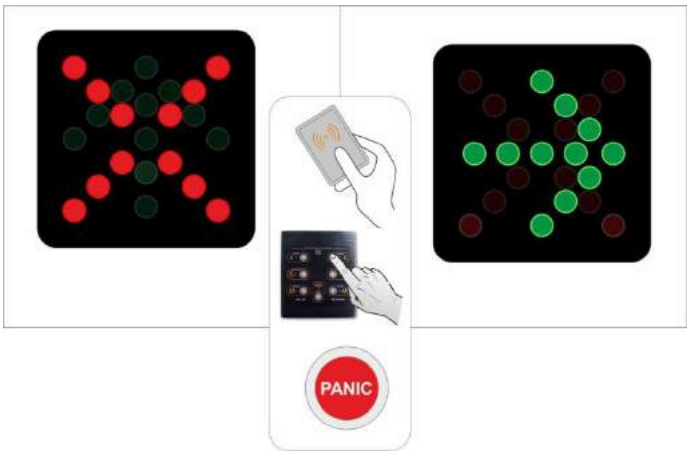

Fig. 4 - Turnstile status LED display

1.4.1.2 The control mechanism **5** (*See Fig.1*) is installed at the top of the body. The hub ***6*** with barrier rods *7*, securely fixed to its levers by crimping method, is installed on the control mechanism shaft. One of three barrier rods is positioned horizontally barring the turnstile access.

1.4.1.3 The plates, on which power supply unit, controllers, terminal blocks for connection to 220 V network and control panel are mounted, are fixed inside the turnstile post ***1*** (*See Fig.1*) under the removable door ***8*** (for the turnstiles CENTURION-M and BASTION-M) or removable lid ***4*** (for the turnstiles TWIX and SKULL). Controller controls the turnstile motor analyzing signals from speed and position sensors as well as provides the motor protection against overloads. Receiving control commands from peripherals (control panel, ACS etc.) the controller controls LED displays and generates feedback signals for ACS (Access Control System).

1.4.1.4 The external control panel (*See Annex B*) has the following functions: single entry access, single exit access; entry locking, exit locking; free entry access, free exit access, panic.

1.4.1.3 The tripod turnstile control mechanism design is shown in Figure 5.

Top view

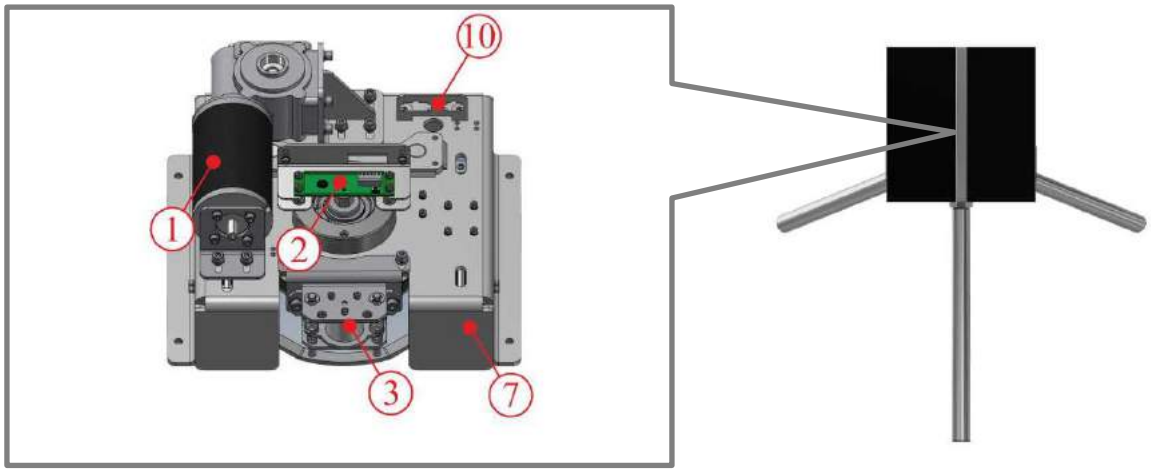

Front view

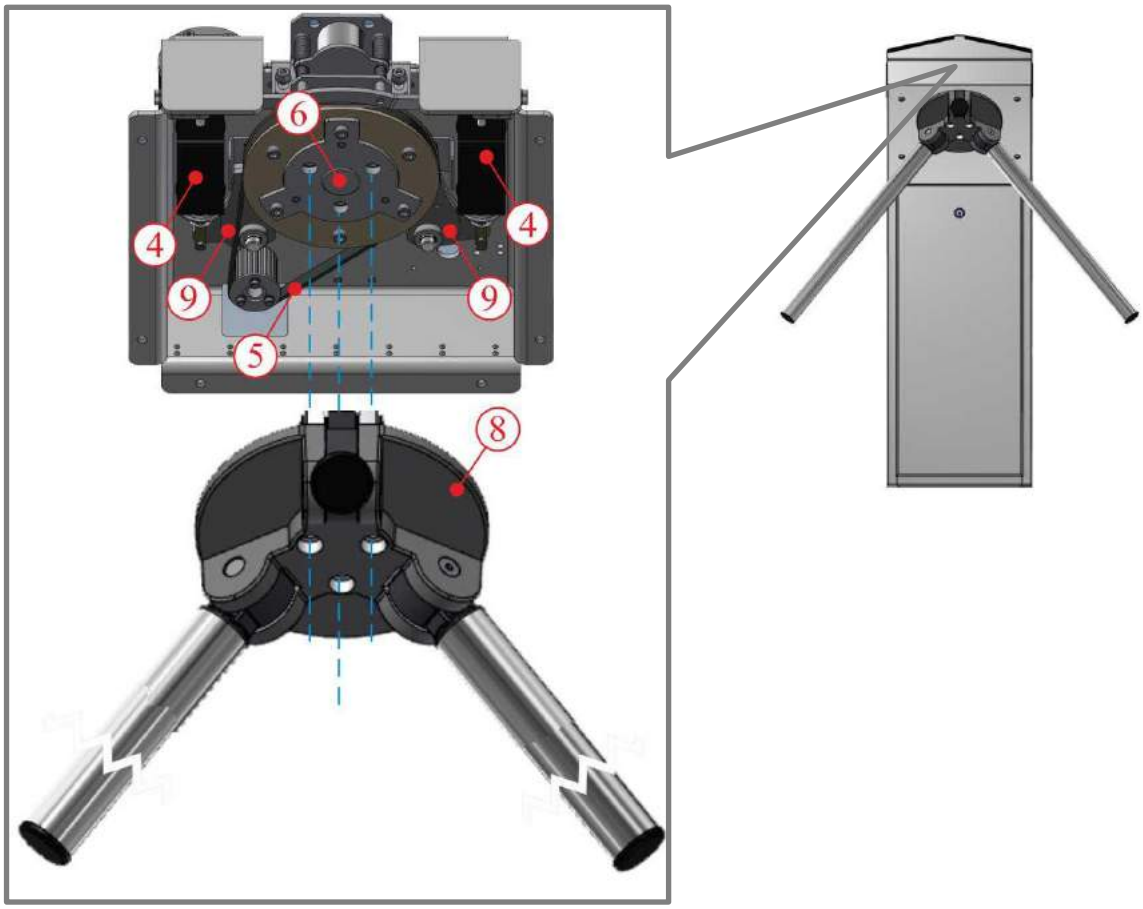

1 – gear motor;
2 – position sensor;
3 – antipanic device;
4 – locking solenoid;
5 – driving belt;
6 – hub shaft;
7 – mechanism body;
8 – hub with barrier rods;
9 – stop catches;
10 – mechanism connectors;

Fig. 5 – Turnstile actuating mechanism

1.4.3 Turnstile principle of operation

1.4.3.1 Turnstile operation modes:

1) single access in the direction “A” or “B”;
2) locking;
3) free access in the direction “A” or “B”.
4) "PANIC" mode

1.4.3.2 In the initial state, when the turnstile is deenergized, barrier rods are locked from rotation and access is barred.

1.4.3.3 Green arrow in the intended direction is lit on LED display and barrier rods are unlocked when access permission command in the direction “A” or “B” comes to controller. Servomotor is actuated and turns barrier rods in the appropriate direction when a barrier rod is manually gently pushed in the intended direction. After the turnstile pedestrian access barrier rods continue to smoothly turn forward (turn additionally) gradually slowing down and when the relevant angle is reached they are locked by means of two stop catches of the actuating mechanism.

The mechanism powerful controllable ratchet system does not allow to return a barrier rod in the opposite direction (against the movement in which the access was started) after rotation to 30 º, 60 º, 90 º, 120º.

In case of need for emergency human evacuation from building rooms, the turnstile goes to "PANIC" mode and provides free access in both directions by means of antipanic device.

The antipanic device (*See Fig. 6*) is automatically activated when the turnstile is deenergized (Failsafe), and in this case a barrier rod can't be returned to its initial position during the active panic mode.

Barrier rod is dropped and access way is cleared when the "PANIC" button is pushed on control panel and hold for more than 7 seconds or when signal is sent to the relevant input (**in1**) of the turnstile controller.

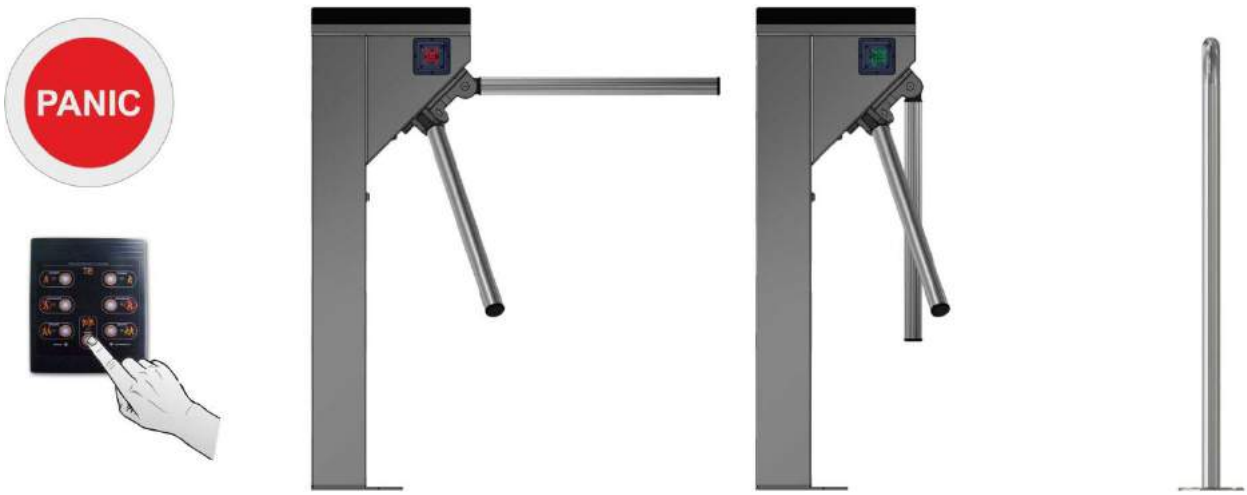

A) "Standby" mode B) "Panic" mode

Fig.6 – Turnstile operation in "PANIC" mode

After the signal is deactivated from the input (**in1**) or deactivation of the panic mode from control panel, a barrier rod is automatically reset to its initial position.
Before turning on the power and turning off the panic, you need to manually check the verticality of the barrier rod (if necessary, lower the leash manually to the stop). After full recovery - check the blocking of all three barrier rods.

a) The positions of the rod in the "PANIC" mode before restoring

b) The positions of the restored rod in the "Standby"mode

Fig.7 - Deactivation of the "PANICA" mode and restoration of the leash to the starting position

More detailed description of the turnstile operation modes is given in section 1.8 "Description and operation of controller as a component of the turnstile".

1.4.3.4 The turnstile 12V DC power voltage is provided by power supply unit.
1.4.3.5 The turnstile wiring diagram is shown in Annex C.

1.5 Instrumentation, tools and accessories

Dedicated tools are not required for installation of the turnstile (multi-purpose measurement instrumentation and installation tools are sufficient *(See Fig. 8)*).

- puncher;
- concrete drills (according to diameter of anchors included in the turnstile scope of delivery);
- extension cord;
- kit of end and pin wrenches;
- kit of hexagons;
- kit of screwdrivers;
- hammer;
- multimeter (tester);
  measuring tape
- marker;
- pliers, side cutters;
- builder's level.

Fig. 8 - Tools and accessories for installation

1.6 Description and operation of controllers as components of the turnstile

1.6.1 **Motorized mechanism controller PCB.201.01.00.00**

The controller is designed for acquisition of commands from **the turnstile controller** PCB.112.21.20.00 and generation of signals controlling motor and the motorized mechanism locking solenoids.

1.6.1.1 The controller is assembled on the (85 x 70mm) board, on which electronic components and connectors for external connections are mounted.

13 LEDs are installed on the controller board. Their purpose is as follows:

- 8 LEDs indicate condition of inputs “IN1» «IN8”.
- "POWER" LED indicates availability of supply voltage 5V.
- 4 LEDs indicate condition of outputs for motor connection.

24 terminals are installed on board: 2 of them are designed for external connections, the rest are designed for connection to the turnstile units or are standby.

1.6.1.2 Technical features
The controller technical features are shown in Table 5.

Table 5

Parameter description	Parameter value
Number of inputs	2
Number of outputs	4
Type of inputs	logical
Type of outputs «GRN1», «RED1», «GRN2», «RED2»	open collector
Logical «1» voltage	(3,7 ÷ 5) V
Logical «0» voltage	(0 ÷ 1,7) V
Maximum peak voltage applied to inputs «IN1»÷« IN8»	15 V
Peak voltage switched by outputs «GRN1», «RED1», «GRN2», «RED2»	30 V
Peak current switched by outputs «GRN1», «RED1», «GRN2», «RED2»	2 A
Peak voltage switched by outputs «-MG1», «-MG2»	50 V
Peak current switched by outputs «-MG1», «-MG2»	5 A
Peak voltage switched by outputs «MOT1», «MOT2»	27 V
Peak current switched by outputs «MOT1», «MOT2»	≤ 4 A
Controller supply voltage	(10 ÷ 27) V
Consumption current when outputs «MOT1» and «MOT2» are OFF	≤0,15 A
Climatic modification and location category according to GOST 15150-69	MC4

The controller appearance is shown in *Figure 9*.

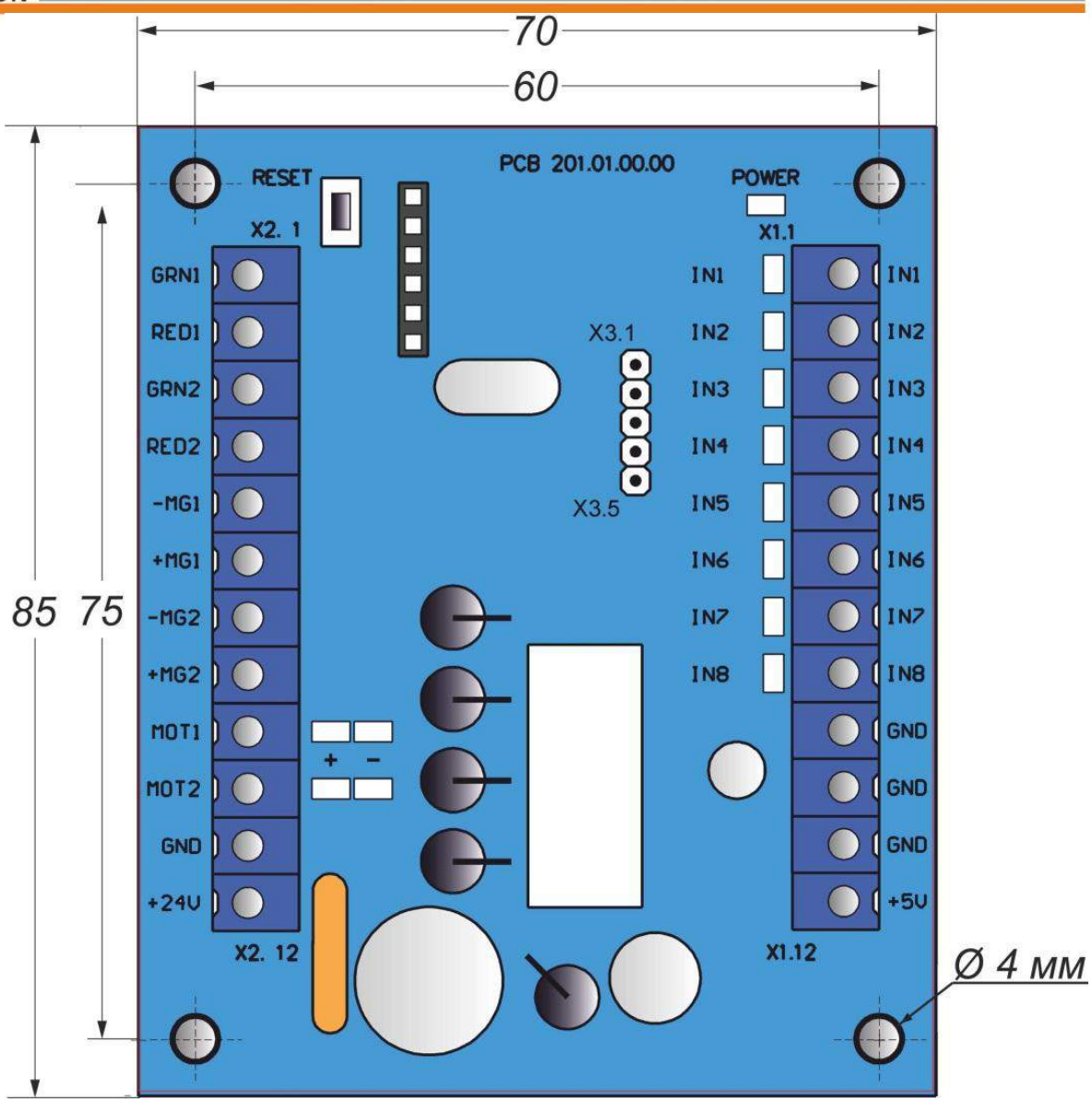

Fig. 9 – Appearance of the motorized mechanism controller PCB.201.01.00.00

1.6.1.3 Description of controller operation

The controller controles the turnstile DC motor and the turnstile mechanism locking solenoids according to the logic entered into program depending on incoming commands, rotor position, rotation speed and motor current. It provides rotor locking in initial state, maintaining rotor rotation speed in access mode as well as motor protection in emergency situations. Control commands are issued from the turnstile controller PCB.112.21.20.00 via communication port "X3".

The purpose of the controller contacts, designed for connection to peripherals, is specified in Table 6.

Table 7

Connector/ contact No	Designation	Direction	Purpose	Signal parameters and description
X1/1	IN1	ENTRY	Not applicable	1) logical «0» (0 ÷ 1,7) V; 2) logical «1» (3,7 ÷ 5) V; 3) active level of signal – logical «0»; 4) voltage on open input ≤ 5 V
X1/2	IN2	ENTRY	Not applicable	
X1/3	IN3	ENTRY	Selection of turnstile type	
X1/4	IN4	ENTRY	Not applicable	
X1/5	IN5	ENTRY	Connection of rotor position sensor	
X1/6	IN6	ENTRY		
X1/7	IN7	ENTRY		
X1/8	IN8	ENTRY		
X1/9	GND		«-» power supply (common wire)	
X1/10	GND			
X1/11	GND			
X1/12	+5 V	EXIT	Not applicable	
X2/1	GRN1	EXIT	Not applicable	
X2/2	RED1	EXIT	Not applicable	
X2/3	GRN2	EXIT	Not applicable	
X2/4	RED2	EXIT	Not applicable	
X2/5	-MG1	EXIT	Connection of locking solenoid winding	1) type of output – open collector; 2) peak voltage on privacy key – 50 V; 3) peak current of public key – 5 A
X2/6	+MG1	EXIT	Connection of locking solenoid winding (cathode of protective diode)	
X2/7	-MG2	EXIT	Connection of locking solenoid winding	
X2/8	+MG2	EXIT	Connection of locking solenoid winding (cathode of protective diode)	
X2/9	MOT1	EXIT	Motor connection	1) voltage (10 ÷ 27) V; 2) current ≤ 4 A
X2/10	MOT2	EXIT		
X2/11	GND		«-» power supply (common wire)	
X2/12	+24 V	ENTRY	«+» power supply (controller energization)	1) voltage (10 ÷ 27) V; 2) current ≤ 4 A
X3	X3	ENTRY / EXIT	Communication port	1) logical «0» (0 ÷ 1) V; 2) logical «1» (3,5 ÷ 5) V

1.6.2 Turnstile controller PCB.112.21.20.00

The controller is designed for acquisition of control commands from peripherals (control panel, access control system etc.), generation of feedback signals, the turnstile LED display control and the motorized mechanism controller control.

1.6.2.1 The controller is assembled on board (104x68) and designed for installation inside the turnstile body or power supply box. The controller appearance is shown in *Figure 6*. 19 LEDs are installed on the controller board. Their purpose is as follows:

- LED "POWER" initiates availability of power supply voltage 5V;
- LED "OPERATE" initiates operability of microprocessor;
- 7 LEDs initiate state of outputs for peripheral connections "OUT1» ÷ «OUT7";
- 3 LEDs "SENSOR" initiate state of rotor position sensor;
- LEDs «RX» and «TX» initiate respectively reception and transmittance in serial port.

40 terminals are installed on the board: 14 of them are designed for external connections, the rest are designed for connection to the turnstile units or are standby.

1.6.2.2 Technical features
The controller technical features are shown in *Table 7*.

Table 7

Parameter description	*Parameter value*
Number of inputs for acquisition of control commands	5
Number of signal outputs	7
Type of inputs	logical
Type of outputs	open collector
Logical «1» voltage	(3 ÷ 5) V
Logical «0» voltage	(0 ÷ 2,2) V
Maximum peak voltage applied to inputs «IN1»÷« IN8»	15 V
Peak voltage switched by signal output transistors	50 V
Peak current switched via signal outputs	0,1 A
Controller supply voltage	(9 ÷ 15) V
Maximum consumption current	0,15 A
Number of serial ports of signal reception and transmission (RS-485)	1
Climatic modification and location category according to GOST 15150-69	MC4

1.6.2.3 Description of operation

The controller operates according to the program entered into microprocessor memory. The turnstile mechanism and LED displays are controlled according to control commands and status of rotor position sensors based on the logic downloaded into program. Control commands can be transmitted via RS485 (from control panel) or logical inputs (by closing and opening of inputs "INP1" ÷ "INP5" on "GND").

The controller (along with the turnstile) can be in the INITIAL STATE (closed for access) or in the following access modes:

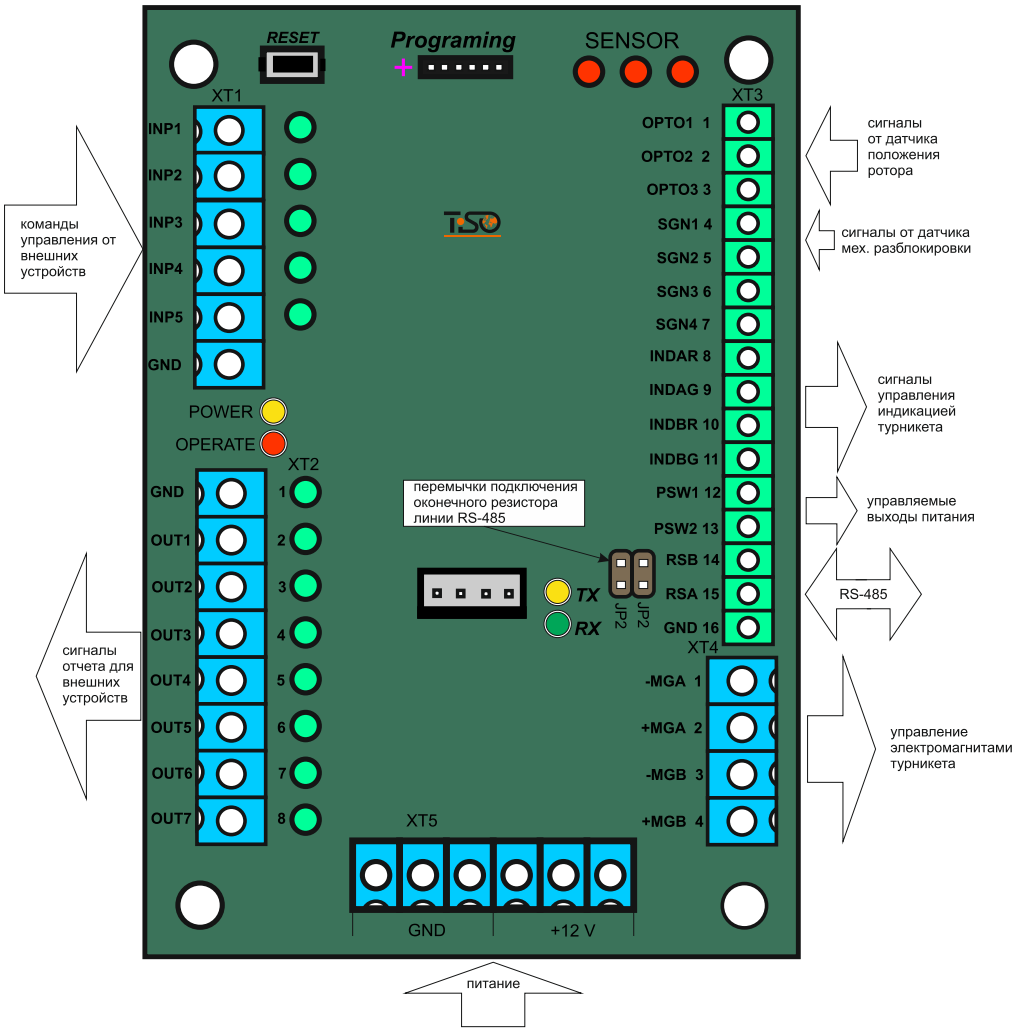

Fig. 10– Appearance of the turnstile controller PCB.112.21.20.00

- SINGLE ACCESS IN ONE DIRECTION;
- FREE ACCESS IN ONE DIRECTION;
- LOCKING OF ACCESS.

Other operating modes are combinations of various or similar modes in different directions:

- Single access in one direction and any mode in opposite direction.
- Free access in one direction and any mode in opposite direction.
- Locking of access in one direction and any mode in opposite direction.
- “PANIC” function.

1.6.2.3.1 «INITIAL STATE»

The controller is in this mode when there are no commands “TO BE OPENED A/B" and the turnstile rotor is set to the point 0º, 120º or 240º.
In this mode solenoids lock rotor: Denied red LED is lit in both directions.

1.6.2.3.2 «SINGLE ACCESS IN ONE DIRECTION»

In this mode the controller sends control command to the motorized mechanism controller that results in rotor unlocking in one direction with the possibility of its revolving to 120º. It provides access of one pedestrian through the turnstile.

The controller is switched to “SINGLE ACCESS IN ONE DIRECTION”, if in the INITIAL STATE it receives “TO BE OPENED A/B" command (i.e. active level of signal is sent to input “INP4” or “INP5”). In this case the turnstile is open within action period of signal. The command can also be sent delay of WAITING FOR START OF ACCESS.
Sequence of the controller operations after reception of "TO BE OPENED A/B"command is as follows:

- Delay of WAITING FOR START OF ACCESS is initiated (Factory setting 5 sec.).
- Controller deenergizes solenoid and rotor is unlocked in the relevant direction.
- LEDs are switched from red to green according to the authorized access.

Then two alternatives of events are possible.
1) First alternative: If within active status of "TO BE OPENED /B" (“INP4”/“INP5”) or during delay of WAITING FOR START OF ACCESS rotation of rotor is not started, then controller is reset to ”INITIAL STATE”;
2)Second alternative: If in the above mentioned cases rotation of rotor is started, then further behavior of controller depends on angle of rotor rotation.

- When rotor is rotated to 6º, LEDs are switched from green to red, indicating that access is occupied. Output signal START OF ACCESS "A/B" ((“OUT1” or “OUT2”) becomes active.
- When rotor is rotated to 54º the output signal “START OF ACCESS "A/B” (“OUT1”or “OUT2”) is removed. Delay of WAITING FOR START OF ACCESS is reset;
- When rotor is rotated to 64º, ACCESS DETECTION (OUT3 or OUT4) signal is generated.
- When rotor is rotated to 120º, OCCUPIED ACCESS A/B and ACCESS DETECTION(OUT3 or OUT4) signals are reset and then availability of "TO BE OPENED A/B" (INP4 or INP5) command, conforming to the current, is checked. If by this moment the command remains active, the controller switches to FREE ACCESS mode and if not, then it is reset.

1.6.3.3.2 FREE ACCESS IN ONE DIRECTION
In this mode rotor can easily rotate in free access direction . In the FREE ACCESS mode green LED of the relevant direction is blinking.
The controller is switched to this mode in two cases:

- First: when "TO BE OPENED A/B" (input INP4 or INP5) command is maintained in active status at the moment of rotor crossing the point 120º upon termination of SINGLE ACCESS.
- Second: after reception of FREE ACCESS command in the relevant direction via RS 485.

After the controller is switched to FREE ACCESS mode, output signals of “OCCUPIED ACCESS”, “ACCESS DETECTION” of the relevant direction are generated as described in Table 8.
Exit from this mode into INITIAL STATE is taken place after cancellation of "TO BE OPENED A/B" command or reception of FREE ACCESS CANCELATION command via RS485. But it will happen not instantly and only when rotor reaches one of the starting points 0º, 120º or 240º, i.e. if free access is canceled during started access it will be completed as free.

1.6.2.3.4 AUTHORIZATION OF SINGLE ACCESS IN TWO DIRECTIONS

Since the turnstile having one rotor can't rotate in two directions simultaneously, the controller can only unlock rotor in two directions and after access in one of directions is started, the reverse direction will be closed.
The controller is switched to this mode if in the INITIAL STATUS it simultaneously acquires "TO BE OPENED A" and "TO BE OPENED B" commands. The second signal also can come during the time when the first signal is already active, but rotation of rotor did not start yet. In this case:

1) The controller unlocks rotor in two directions via electromagnets.
2) Switches LEDs from red to green in both directions.
3) Initiates two delays of "WAITING FOR START OF ACCESS A and B" (if commands have come via RS-485) for each access individually, which are counted from the moment of acquisition of commands.
4) The controller is waiting for start of access.
5) After rotor is revolved to 6º in any side, opposite direction will be locked LED is switched to red.

Then the controller is operating as described in section "SINGLE ACCESS IN ONE DIRECTION".
If during active status of the "TO BE OPENED A" and "TO BE OPENED B" signals or during WAITING FOR START OF ACCESS rotor has not been revolved in any side to the angle more than 6º, the controller is switched to the INITIAL STATE.

1.6.2.3.5 “PANIC” FUNCTION
The turnstile is switched to "PANIC" state:

- After the active state is held on input (“INP5” "PANIC") for more than 1 sec;
- After "PANIC" command is sent by control panel (the command is sent after "PANIC" button is held for more than 7 sec.).

After activation of "PANIC" function the barrier rod, which is in horizontal position, will be dropped, the output (“OUT7” "PANIC") will be switched to active state during the function action.
The "PANIC" function is canceled:

- After active state is released on input “INP5” "PANIC");
- After command “CANCELATION of PANIC” is sent from control panel (repeated pushing of "PANIC" button);

In each case the appropriate command will be issued to the motorized mechanism controller resulting in rotor rotation and the dropped barrier rod will come to its operating position and will be fixed (barrier rod locking to be checked manually).

1.6.2.3.6 LOCKING OF ACCESS
The locking function can be activated by means of control panel only.
After activation of “LOCKING OF ACCESS A or B” the turnstile rotor is locked in the relevant direction and access authorization commands will be ignored in the locked direction; The locked direction is indicated by blinking red color.
The purpose of controller contacts, designed for connection to peripherals, is specified in Table 8.

Connector/ contact No	Designation	Direction	Purpose	Signal parameters and description
1	*2*	*3*	*4*	*5*
XT1/1	INP1 («PANIC»)	ENTRY	«SWITCHING TO PANIC STATE» command	1) logic «0» (0 ÷ 2,2)V 2) Logic «1» (3÷5) V 3) Active level of signal (Factory setting) - Logic «0» 4) Voltage on open input < 5 V
XT1/2	INP2 («TO BE OPENED A»)	ENTRY	"TO BE OPENED FOR SINGLE ACCESS" in pulse mode command. When this command is issued entry is activated within 5 sec.	
XT1/3	INP3 («TO BE OPENED B»)	ENTRY		
XT1/4	INP4 («TO BE OPENED A»)	ENTRY	"TO BE OPENED FOR SINGLE/FREE ACCESS" command. Input is activated within the time of holding in active state. Free access is occurred when entry is kept in active state after rotor reaches the angle 120º.	
XT1/5	INP5 («TO BE OPENED B»)	ENTRY		
XT1/6	GND (common)		«-» power supply (common wire)	
XT2/1	GND (common)			
XT2/2	OUT1 («START OF ACCESS A»)	EXIT	Signal is generated by controller when rotor revolves from 6º to 54º in the relevant direction	1) Type of output - open collector. 2) Peak voltage on public key 55 V 3) Peak current of public key 100 mA 4) Resistance of public key (5 ÷ 7) Ohm 5) Active level of signal (Factory setting) - Logical «0»
XT2/3	OUT2 («START OF ACCESS B»)	EXIT		
XT2/4	OUT3 («DETECTION OF ACCESS A»)	EXIT	Signal is generated by controller when rotor revolves from 64º to 120º in the relevant direction	
XT2/5	OUT4 («DETECTION OF ACCESS B»)	EXIT		
XT2/6	OUT5 («ACCESS IS OCUPIED»)	EXIT	Signal is generated by controller when rotor revolves from 6º to 120º in any direction	
XT2/7	OUT6 («ERROR»)	EXIT	Signal is generated by controller when violation of operation logic is detected	

Continued Table 8

1	2	3	4	5
XT2/8	INP1 («PANIC»)	EXIT	Signal is generated by controller when “PANIC” function is activated	1) Logical «0» (0 ÷ 2,2) V 2) Logical «1» (3 ÷÷5) V 3)Active level of signal (Factory setting) - Logical «0» 4) Voltage on open input < 5 V
XT3/1	OPTO1	ENTRY	It is used for acquisition of data about the turnstile rotor position	
XT3/2	OPTO2	ENTRY		
XT3/3	OPTO3	ENTRY		
XT3/4	SGN1	ENTRY	Not applicable	
XT3/5	SGN2	ENTRY	Selection of turnstile modification	
XT3/6	SGN3	ENTRY	Not applicable	
XT3/7	SGN4	ENTRY	Not applicable	
XT3/8	INDAR	EXIT	It is used for the turnstile LED display control	1) Type of output - open collector. 2) Peakk voltage on privacy kkey 30 V 3) Peakk current of public key 2A 4) Resistance of public key 0,1 Ohm
XT3/9	INDAG	EXIT		
XT3/10	INDBR	EXIT		
XT3/11	INDBG	EXIT		
XT3/12	PSW1	EXIT	Not applicable	1) Type of output - open emitter. 2) Voltage on output in ON state 12 V. 3) Peak current consumed from output 1 A. 4) Resistance of public key 0.25 Ohm
XT3/13	PSW2	EXIT	Not applicable	

Continued Table 8

1	2	3	4	5
XT3/14	RSA		It is used for data transmission via serial port	Interface RS-485
XT3/15	RSB			Interface RS-485
XT3/16	SH		RS-485 SHIELD	
XT4/1	- MGA	EXIT	It is used for energization of barrier rod drop system solenoid in "PANIC" function	1) Type of output - open collector. 2) Peak voltage on public key 50 V 3) Peak current of public key 9A 4) Resistance of public key 0,11 Ohm
XT4/3	- MGB	EXIT	Not applicable	
XT4/2	+ MGA		Not applicable	
XT4/4	+ MGB		Not applicable	
XT5/1	GND (common)		«-» power supply (common wire)	
XT5/2	GND (common)			
XT5/3	GND (common)			
XT5/4	+ 12 V		«+» power supply (controller energization)	1) supply voltage12 V; 2) Consumption current < 150mA
XT5/5	+ 12 V			
XT5/6	+ 12 V			
XP1	XP1	ENTRY / EXIT	Communication port	1) logical «0» (0 ÷ 1) V; 2) logical «1» (3,5 ÷ 5) V

2 INTENDED USE

2.1 Operation limitations

2.1.1 The turnstile must be used in the environment specified in p. 1.1.5 of this document subject to the specifications listed in section 1.2.

IT IS FORBIDDEN:

1) **TO MISUSE THE TURNSTILE (See section 1 "DESCRIPTION AND OPERATION");**
2) **TO USE THE TURNSTILE UNEARTHED;**
3) **TO USE HEATING PIPES AND RADIATIONS AS WELL AS PIPES OF CENTRAL WATER SUPPLY FOR EARTHING**
4) **TO REPAIR AND ADJUST WITHOUT DEENERGIZATION;**
5) **TO RELOCATE THE OBJECTS EXCEEDING THE PASSAGEWAY WIDTH THROUGH THE TURNSTILE ACCESS AREA;**
6) **TO JERK AND IMPACT BARRIER RODS, LED DISPLAY OR OTHER PARTS THE PRODUCT, WHICH MAY CAUSE THEIR MECHANICAL DAMAGE;**
7) **EXERT FORCE ON LEAVES MORE THAN 400 H (40 KG) IN "ACCESS LOCKING" MODE**

2.1.2 It is forbidden to use the turnstile:

– at the presence of mechanical rattle in movable parts of the turnstile;
– when metalwork of the turnstile and its components and accessories are mechanically damaged.

2.1.3 List of special operation conditions

- Mean time of the turnstile access (in single access mode) equals to 2,2 sec.
- The turnstile's mechanism allows emergency access by means of antipanic device.
- The force applied by accessor to barrier rod should not exceed 10.0 L.
- Escape door, portal or pedestrian gate can be installed near the turnstile to increase the turnstile traffic flow capacity in case of emergency.

2.2 Layout and installation

2.2.1 The turnstile and components of scope of supply to be delivered to installation site in factory packing. The turnstile to be unpacked only on installation site.

2.2.2 Preparation of the turnstile for installation (dismounting) and commissioning to be performed according to this OM with mandatory observation of safety measures specified in p. 2.1 and general electrical safety code.

WARNING:

The turnstile damages occurred during transportation are not covered by the manufacturer's warranty liabilities.

2.2.3 Safety Measures:

- Installation to be performed only by the persons briefed on safety and studied this manual;
- Only serviceable tools to be used during installation of the turnstile;
- Connection of all cables to be performed only when power supply is OFF;
- **Cables to be laid in compliance with electric code**;
- The turnstile to be installed by at least 2 installers.

2.2.4 General layout of the turnstile access ways

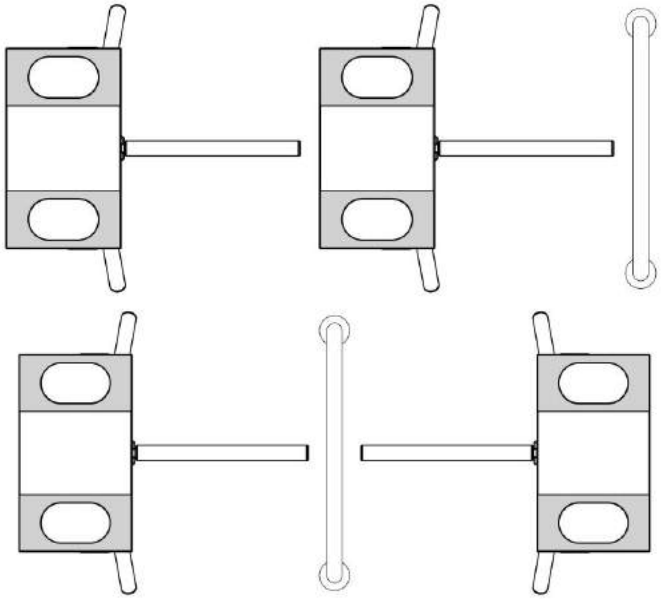

Fig. 11 – Turnstile layout options (conditionally)

Side view

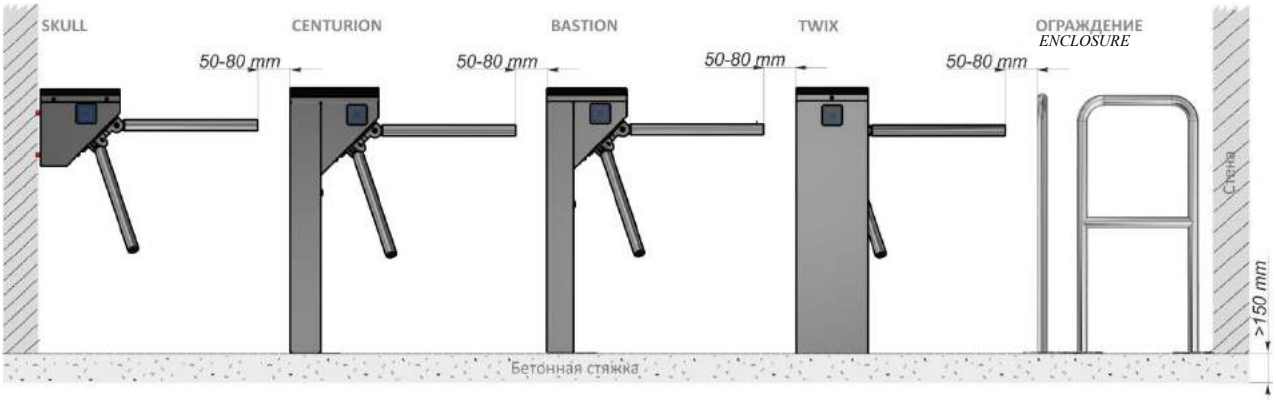

Top view

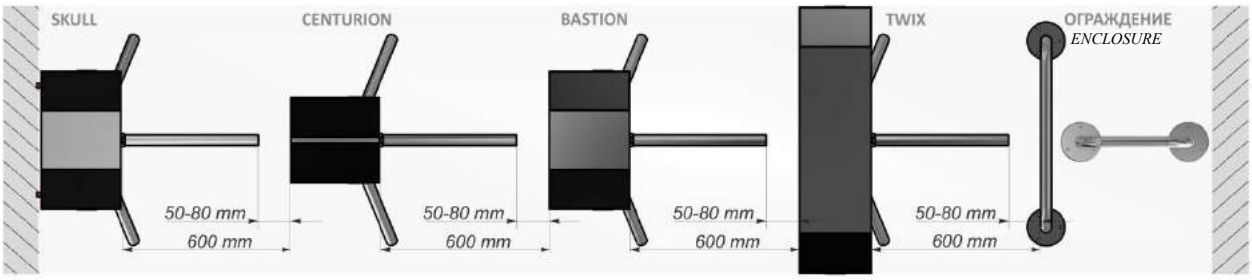

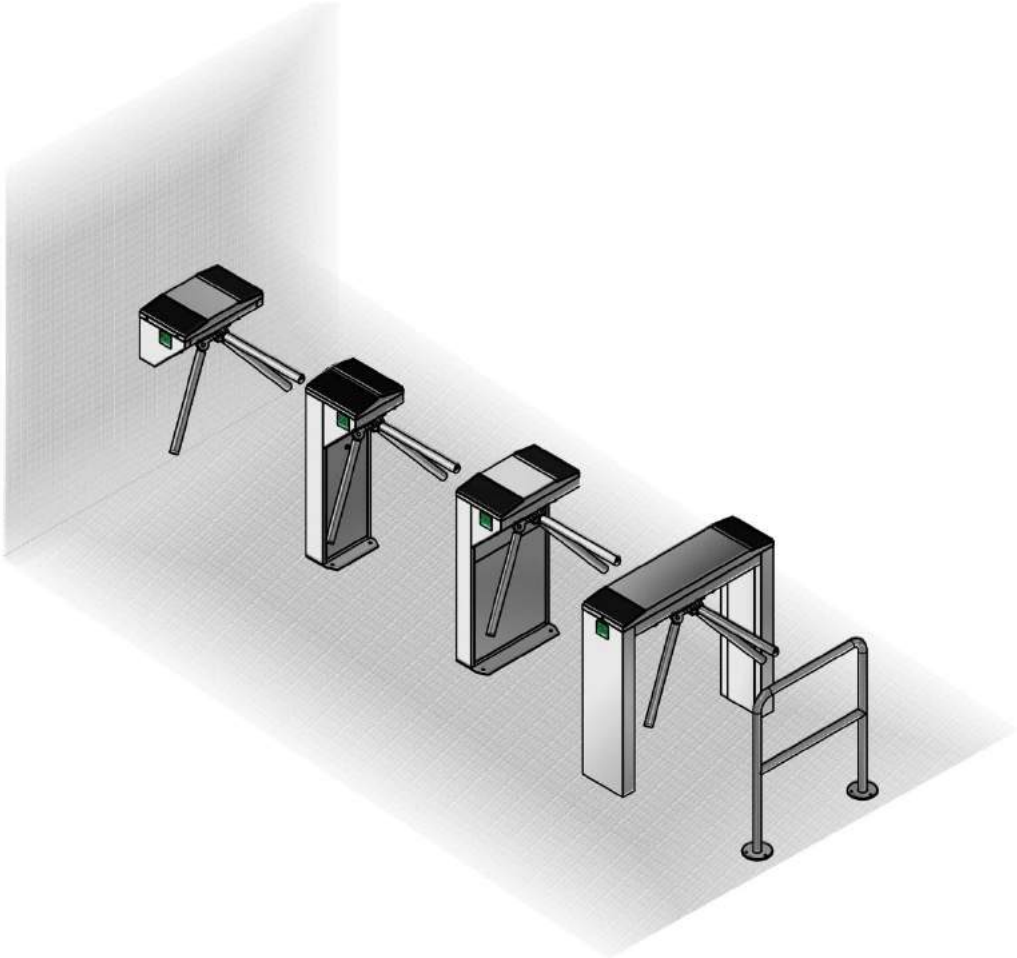

Fig.12 – Tripod turnstile layout (conditionally)

2.2.5 Installation procedure

The turnstile installation procedure is as follows:

1) The package integrity to be checked prior to unpacking. If package is damaged, then damages to be fixed (picture to be taken, damage report to be made).
2) The turnstiled to be unpacked and inspected for defects and damages as well as completeness to be checked according to the turnstile data sheet;

WARNING:
When the turnstile damages are detected or in case of shortage of delivery, installation work to be stopped and the turnstile supplier to be referred to.

3) Make sure that the turnstile installation area is ready as follows:
   - The installation site surface to be flat and horizontal;
   - Thickness of concrete blinding coat under site to be at least 150 mm.
4) The turnstile fixation holes to be marked on the area surface according to *Fig. 12*. The turnstile itself can be used as a template, when installed upright on installation site.
5) The relevant holes to be drilled on the surface according to the marking due to diameter of anchors (12×120M10) for the turnstile fixation. Anchor jackets to be inserted into the prepared holes.
6) When cables to be laid under the floor surface, then a cable duct to be prepared in the floor leading to the turnstile rack cable entry area. The cable entry area layout is shown in Fig.13 diagram.

a) CENTURION-M

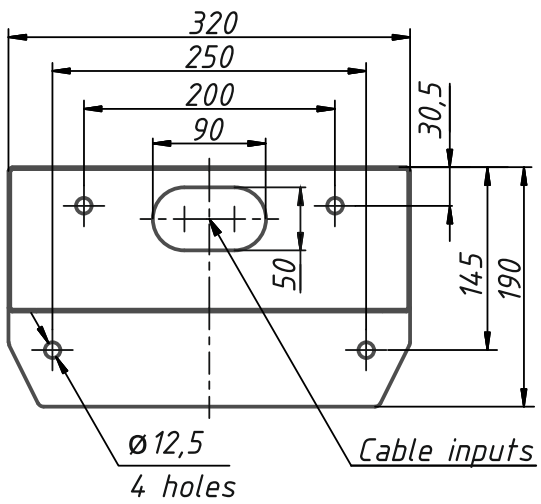

б) BASTION-M

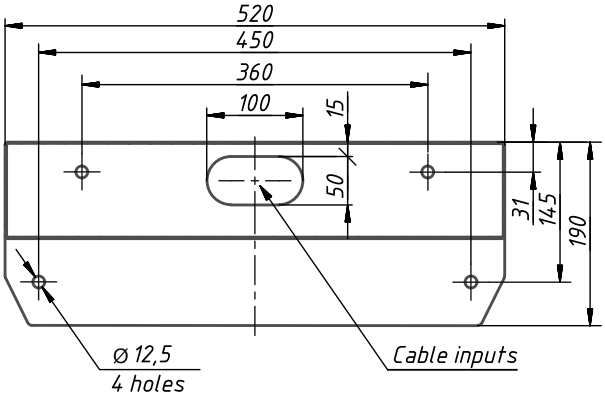

в) TWIX-M

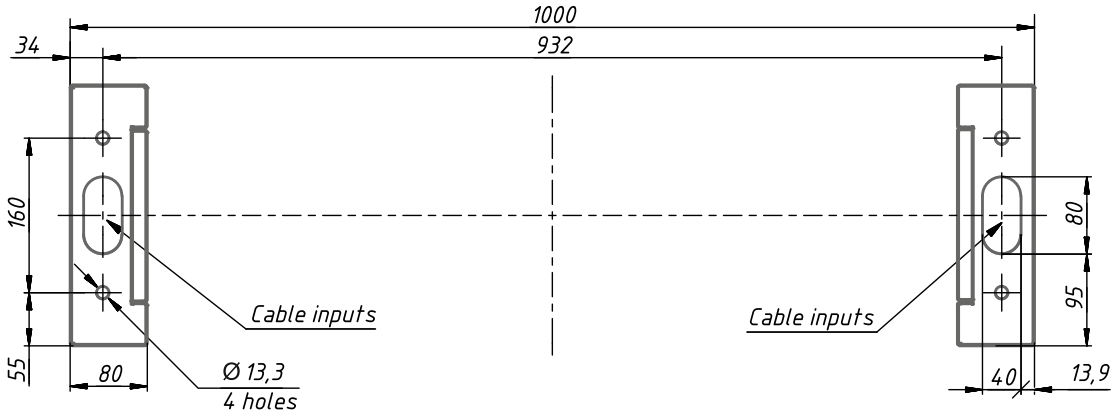

г) SKULL-M

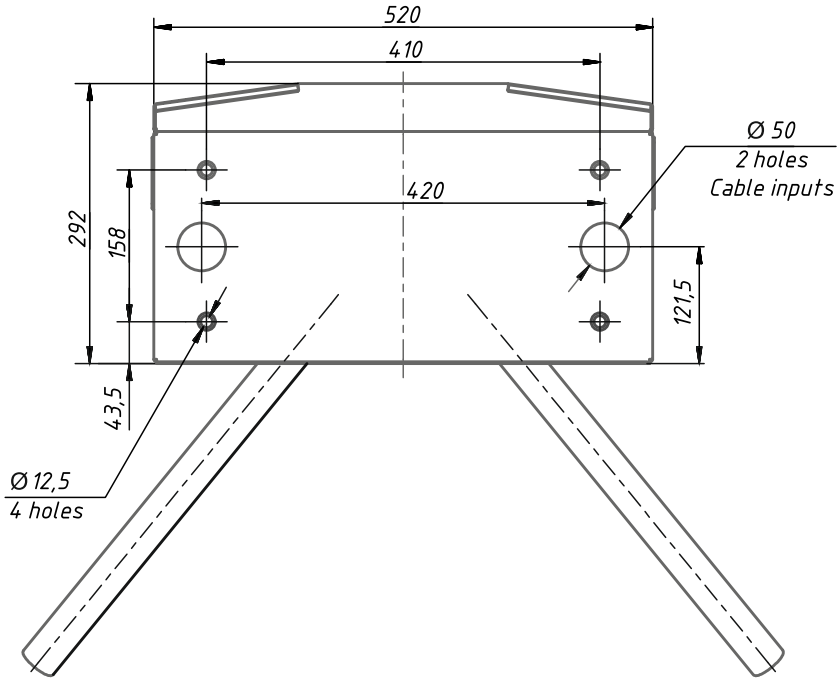

Fig. 13 – Tripod type turnstile installation marking

7) Installation of hub on the tripod turnstile (Through the example of the turnstile AUIA.095-10 "CENTURION-M"). (*For the sake of convenience installation of the hub with barrier rods is acceptable at the end of installation and connection of the turnstile):*

a) The hub (1) barrier rods *(2)* to be set out manually (*See Fig. 14*).
b) The hub (*1)* to be mounted on center of the turnstile mechanism *(4)*;
During installation attention to be paid that the mechanism fixation holes to be aligned with the hub holes;
c) The hub *(1)* to be secured with three screws *(3)*.

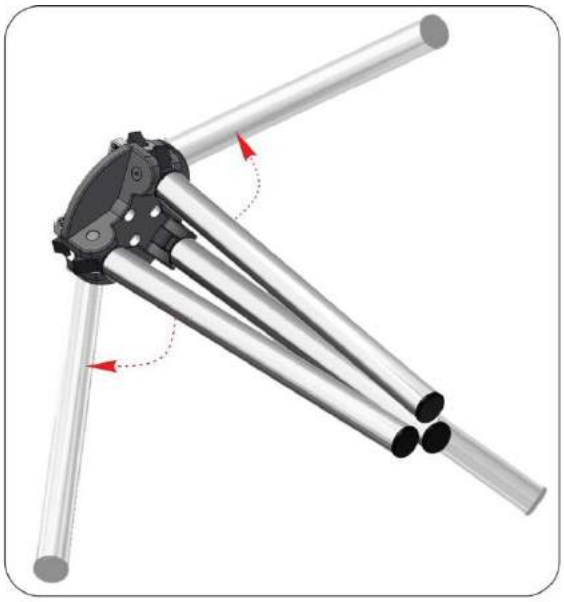

Условные обозначения:
1. Ступица;
2. Поводки;
3. Винты М10х60 (с внутренным шестигранником);
4. Механизм управления (сервопривод);

Legend:
1. Hub;
2. Barrier rods;
3. Allen screws M10x60;
4. Control mechanism (servomotor);

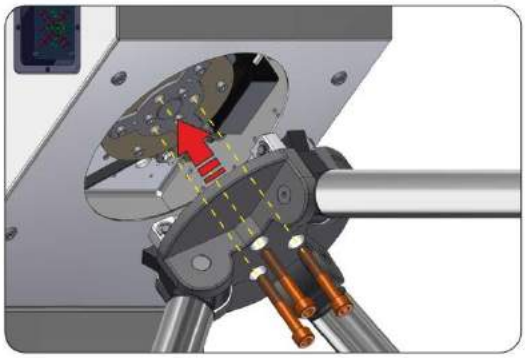

Fig. 14 – Installation of the hub with barrier rods into the tripod turnstile body

WARNING:

- **The turnstile is fixed by means of Redibolt anchors (with jacket and screw) included in the scope of delivery.**
- **The turnstile installation and fixation to be performed only after all electric cables are pulled.**

8) The rack door to be removed by turning the lock key (*Fig. 15*) to access to the "**CENTURION-M**" and "**BASTION-M**" tripod turnstile base fixation and service holes as well as terminal blocks.

The lock pin (1) to be removed and the latch (2) to be opened by lifting it up to remove the rack lid (*Fig.15 , View A*).

1. Door to be opened;
2.Cable to be pulled;
3.Lid to be removed;
4.Card reader to be installed;
5.To be secured with anchors.

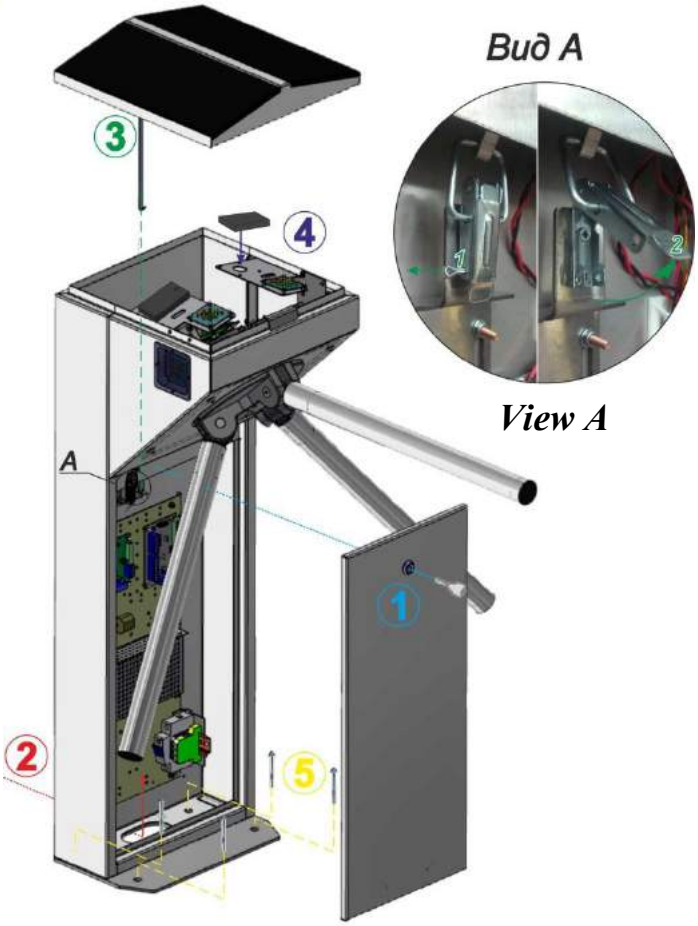

Fig. 15 – General view of the "CENTURION-M" and "BASTION-M" tripod turnstiles assembly

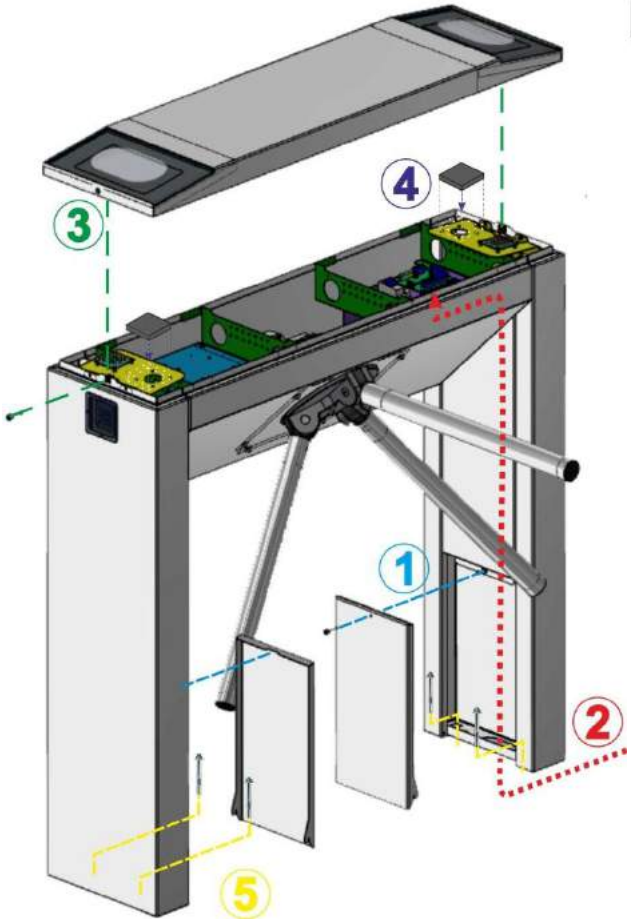

Fig. 16 – General view of the "TWIX-M" tripod turnstile assembly

9) Two turnstile rack doors to be removed by uncrewing one screw fastening door to the body to access to the "**TWIX-M**" tripod turnstile base fixation holes.

The screws on the turnstile rack lid butt ends to be unscrewed and the lid to be removed to access to terminal blocks.

1.Door to be opened;;
2. Cable to be pulled;
3. Lid to be removed;
4. Card reader to be installed;
5. To be secured with anchors.

10) The lid to be removed by unscrewing 4 screws on butt ends (*Fig. 15*) to access to the "**SKULL-M**" tripod turnstile fixation and service holes as well as terminal blocks *(See Fig.17).*

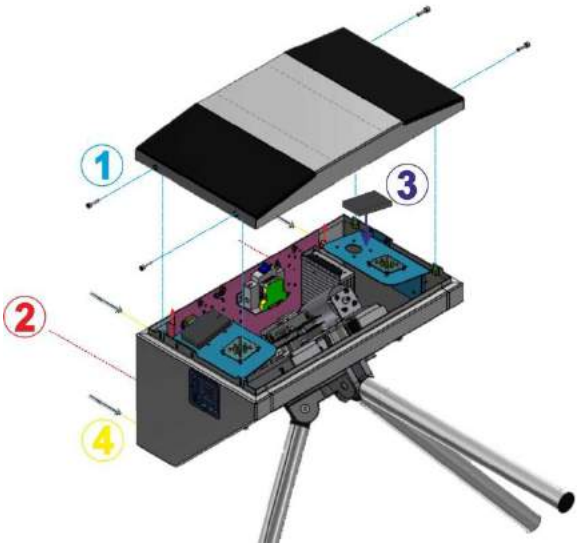

Fig. 17 – General view of the "SKULL-M" tripod turnstile assembly

WARNING:

- **Cables to be pulled in corrugated or metal pipes;**
- **The length of cable free ends to be at least 1 m to provide their entry, termination and connection to the relevant terminals in the turnstile rack.**
- **The cable outlet point to be aligned with the hole on the turnstile mounting plate *(Fig.15-17)*.**

11) The following cables to be pulled to the turstile installation site:
- Power supply cable 230 V ~;
- Control panel link cable;
- Access control system (ACS), if any, connection cables;

12) The turnstile to be installed upright at the prepared location.
- Cables to be pulled through available service hole in the turnstile rack bottom butt end part by reclining the turnstile (Fig.12).
- Fixation holes at the turnstile bottom plate to be aligned with prepared surface holes.

13) Turnstile connection *(Fig. 18)*:

a) Power supply cable ~230 V to be connected
- Phase L to be connected to circuit breaker;
- Neutral (N) to be connected to terminal ~230V;
- Earth (PE) to be connected to earthing terminal (PE).

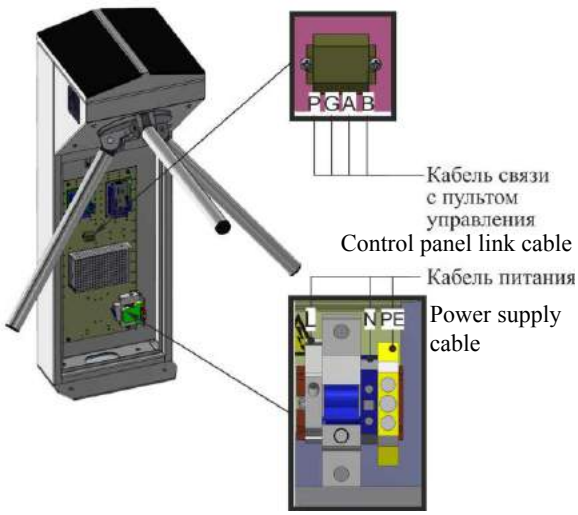

Fig. 18 – Connection of power supply and control panel link cable

b) Control panel link cable to be connected to the terminals *(Fig.18):*
- **P** (Power) – control panel power supply +12V
- **G** (GND) - control panel common wire;
- **A** (RSA) - RSA wire of control panel link line;
- **B** (RSB) - RSB wire of control panel link line;

c) Proximity card readers[2] to be installed if access control system (ACS) is available:

- In the turnstiles CENTURION, TWIX, SKULL and BASTION card readers are installed on special and height adjustable bracket, which is located under upper lid **4** next to LED display **3** (*Fig. 19*).

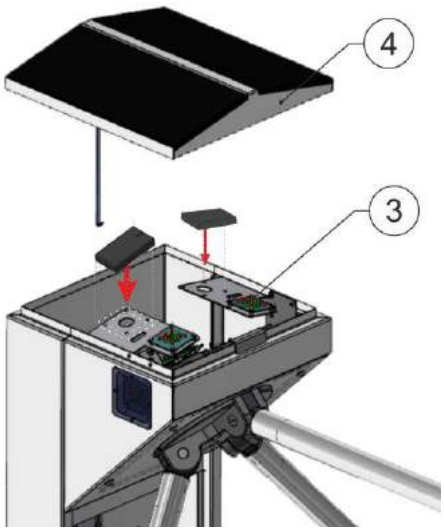

Fi.19 – Installation of card reader into the tripod turnstile

- Maximum sizes of the card reader to be installed are at least *100x100x25* mm*;

14) The turnstile to be secured with anchors included in the scope of delivery.
15) The turnstile rack lid to be installed in the removal reverse sequence**.**
16) The turnstile door to be installed in the removal reverse sequence.

WARNING:
During the turnstile installation it should be taken into account that horizontally positioned barrier rod must be at a distance not more than (50 ÷ 100) mm from access way creator (any surface perpendicular to horizontally positioned barrier rod: enclosure module, wall, etc.).

2.3 Preparation for use

2.3.1 Commission guidelines

Prior to the turnstile energization:

1) make sure of proper connection and good condition of all connecting cables;
2) the turnstile barrier rod turning area to be cleaned from foreign particles.

When mains cable of power supply unit is connected to network the turnstile control mechanism are energized: barrier rods are locked from rotation in both directions barring access.

The turnstile is set in the initial state: red cross is displayed for entry and exit (« × » is lit).

2.3.2 Required inspections

[2] *Is not included in the scope of delivery*

2.3.2.1 When the turnstile is commissioned it is necessary to perform the inspections specified in *Table 9*. The wiring diagram according to Annex C and the control panel according to Annex B to be used during inspection.

Table 9

Turnstile operation mode	Operation mode setting	LED display
1	*2*	*3*
1. Turnstile is closed in both directions (initial state)	–	Red LED is lit
2. Single access in one direction	SINGLE button to be pushed for access in selected direction ("A" or "B")	Green arrow of authorized single access is lit in selected direction and red LED is lit in opposite direction
3. Single access in both directions	Both SINGLE buttons to be pushed for access in both directions ("A" and "B")	Green arrows of authorized single access are lit in both directions
4. Free access in one direction	FREE button to be pushed for access in selected direction ("A" or "B")	Green arrow of authorized free access is lit in selected direction and red LED is lit in opposite direction
5. Free access in both directions	Both FREE buttons to be pushed for access in both directions ("A" and "B")	Green arrows of authorized free access are lit in both directions
6. Single access in one direction and free access in opposite direction	SINGLE button to be pushed for access in selected direction ("A" or "B") and FREE button to be pushed for access in opposite direction	Green arrow of authorized single access is lit in selected direction and green arrow of authorized free access is blinking in opposite direction
7. Single access in one direction and locking access in opposite direction	SINGLE button to be pushed for access in selected direction ("A" or "B") and LOCK button to be pushed for blocking access in opposite direction	Green arrow of authorized single access is lit in selected direction and red LED of locked access is blinking in opposite direction

Continued Table 9

1	2	3
8. Free access in one direction and locking access in opposite direction	FREE button to be pushed for access in selected direction ("A" or "B") and LOCK button to be pushed for blocking access in opposite direction	Green arrow of authorized free access is lit in selected direction and red LED of locked access is blinking in opposite direction
9. Locked access in one direction	LOCK button to be pushed to lock access in selected direction ("A" or "B")*	Red LED of selected single access is blinking
10. Locked access in both directions	Both LOCK buttons to be pushed to lock access in both directions ("A" and "B")**	Red LED of blocked access in both directions s is blinking
11 Activation of antipanic device	PANIC button to be pushed and hold within at least 5 sec.***	Green arrows of authorized free access in both directions are blinking
* In this case other control panel buttons of single and free access in selected direction are locked. ** In this case all control panel buttons of single and free access in both directions are locked. *** In this case the barrier rod is dropped and access is free.		

2.3.2.2 After the turnstile is inspected it is ready for long-term operation.

2.4 Contingency actions

For emergency human escape (in case of fire, acts of God etc.) and enabling free access the turnstile to be unlocked from control panel by issuing the relevant command. Antipanic device to be used for full opening of access way.
The antipanic device (*See Fig. 6*) is automatically activated when the turnstile is deenergized (Failsafe), and in this case a barrier rod can't be returned to its initial position during the active panic mode.
Barrier rod is dropped and access way is cleared when the "PANIC" button is pushed on control panel and hold for more than 7 seconds or when signal is sent to the relevant input (**in1**) of the turnstile controller.
After the signal is deactivated from the input (**in1**) or deactivation of the panic mode from control panel, a barrier rod is automatically reset to its initial position.

3 MAINTENANCE

3.1 General guidelines

3.1.1 Commissioning and subsequent maintenance of the turnstile to be performed only by the staff to be in charge of the turnstile.

3.1.2 The turnstile to be serviced only by the staff having the relevant electrical safety qualification level according to the national requirements.

3.1.3 The turnstile to be installed and operated only by the qualified safety briefed staff having the relevant class of permit to work with electrical facilities with voltage up to 1000V, awaring of this OM, the turnstile design and principle of operation.

3.2 Safety Measures

3.2.1 During maintenance of the turnstile the relevant safety measures according to p. 2.1 to be observed.

IT IS FORBIDDEN:
TO USE DEFECTIVE APPLIANCES, TOOLS, FUSES, INSTRUMENTATION THE SERVICE LIFE OF WHICH EXPIRED.

3.2.2 When instrumentations are prepared for operation it is necessary to strictly comply with the safety requirements specified in instrumentation instruction manuals.

3.3 Maintenance procedure

3.3.1 The turnstile maintenance includes preventive measures which are taken according to the established frequency to maintain the turnstile in operational condition, decreasing of component wearing and prevention of faults and malfunctions.

3.3.2 Daily and periodic maintenance of the turnstile are recommended.
Normally the daily maintenance is carried out before the beginning of operation or during operational timeout and includes visual inspection of the turnstile's housing and, if required, troubleshooting of mechanical damages, surface corrosion and contamination.

IT IS FORBIDDEN:
TO USE ABRASIVE AND CHEMICALLY ACTIVE SUBSTANCES DURING CLEANING OF CONTAMINATED EXTERNAL SURFACES OF THE TURNSTILE.

The recommended stainless steel detergents are given in Table 10.

Table 10

Detergent description	*Manufacturer*	*Country of origin*
Stainless steel cleaning spray Polich	3M	Group of European companies
Cleaning fluid WellDone	Well Done	Hungary
Stailess steel products and other metals cleaner XANTO STEEL 3in1	XANTO	United Kingdom
Foam Dr.BECKMANN	Dr.Beckmann	Germany
Cleaning solution Reinex Edelstahlreiniger	Reinex	Germany
Stainless steel cleaner	Onish	United Kingdom

3.3.3 Visual inspection of the turnstile body, control mechanism and other components for absence of corrosion, warps and other mechanical defects and pollutions;

- visual inspection of connecting, network and earthing cables condition;
- verification of the turnstile performance during manual control in the modes specified in Table 9 or as part of ACS when pendants, identification cards are used;
- verification of reliability of the turnstile screw joints and earthing connections - to be tightened, if applicable;
- lubrication of all rubbing stop levers, wheel and pinion teeth of the turnstile control mechanism at least monthly with lubricant OKB-122-7 according to GOST 18179-72 or LITOL 24, Ciatim or engine oil.

Table 13 **- Periodic maintenance by technical staff**

Component	*Period*	*Action*
Fixation screws	6 months	Checking/Tightening
Mechanical screws	6 months	Checking/Tightening
Actuator	12 months	Control
Controller	12 months	Checking + Cleaning
Position sensors	6 months	Checking + Cleaning
Cable joints and sockets	12 months	Control
Locking device	6 months	Checking + Cleaning + Lubrication

WARNING:
The turnstile should not be washed with water under pressure.
There are no user-serviceable parts inside the turnstile. Do not attempt to perform repair such as lubrication, component replacement and adjustment inside the device. All such works to be performed only by the qualified technical personnel!

4 ROUTINE MAINTENANCE

4.1 General guidelines

Minor malfunctions of the turnstile are listed in *Table 9* and to be remedied by the customer. More complicated malfunctions to be remedied by the manufacturer's representative.

IMPORTANT: INSPECTION, CLEANING, REPAIR OF THE TURNSTILE COMPONENTS TO BE PERFORMED ONLY AFTER THE TURNSTILE IS DEENERGIZED!

4.2 Possible malfunctions

Possible malfunctions of the turnstile and their remedies are listed in Table 12.

Table 12

Symptom	*Possible cause*	*Remedy*
1	*2*	*3*
Turnstile does not operate when energized	There is no mains power supply Idle power cable Power supply unit is out of order	AC power to be restored Power supply cable to be connected Power supply unit to be replaced
Barrier rod rotates freely when power supply is ON	Wires are damaged There is no DC + 12 V Power supply unit is out of order PCB.201.01.00.00 is out of order	Wires to be checked Power supply unit to be checked Power supply unit to be replaced PCB.201.01.00.00 to be replaced
Barrier rods are not rotated	Locking operation to be checked No contact between controllers Position/speed sensor is installed improperly Position/speed sensor is out of order	Joints and lock motion to be checked Communication wires between controllers (boards) to be checked Position/speed sensor to be installed or printed board to be replaced
Barrier rods are not locked	Locking device to be checked	Locking error to be analyzed Position sensor to be adjusted Solenoid to be checked
Turnstile is not unlocked	No contact between controllers Locking device to be checked Turnstile does not receive activation signal from ACS	Connectors and wires between controllers to be checked Locking error to be analyzed Position sensor to be adjusted Solenoid to be checked Make sure that ACS is connected to input terminal on controller board properly Make sure that ACS provides proper activation signal
Control panel waits for "link" audible signal	Control desk is out of contact with controller	Wires to be checked Control desk to be checked Controller to be checked Controller/Control desk to be replaced
LED display does not operate	No contact with controller Wires are damaged LED display is out of order	Wires to be checked LED display to be checked LED display to be replaced
Barrier rods stay in semi-open position	Position sensor is out of order Mechanism disturbances Position/speed sensor is preset improperly	Its operation to be checked manually Mechanism components to be checked Sensor adjustment to be checked

Continued Table 12

1	2	3
Barrier rods rotatation is slow	Mechanism sticking Position/speed sensor is installed improperly	Its operation to be checked manually Mechanism components to be checked Position/speed sensor to be installed or printed board to be replaced Wires to be checked
Barrier rods stay in semi-open position	Mechanism disturbances Position/speed sensor is installed improperly PCB.201.01.00.00 is out of order	Its operation to be checked manually Mechanism components to be checked Position/speed sensor to be installed or printed board to be replaced Wires to be checked
Barrier rods are jammed periodically during rotation	Mechanism disturbances Position/speed sensor is installed improperly PCB.201.01.00.00 is out of order	Its operation to be checked manually Mechanism components to be checked Position/speed sensor to be installed or printed board to be replaced Wires to be checked PCB.201.01.00.00 to be replaced
Barrier rod is not fixed in place/drops spontaneously	Sticking of locking device Idle/deformed retainer (locking) Damaged/worn-out retainers	Sticking to be removed Retainers to be replaced
Turnstile is unlocked but motor does not operate	Position/speed sensor is installed improperly PCB.201.01.00.00 error	Position/speed sensor to be adjusted or PCB to be replaced Joint to be restored/tightened PCB. 201.01.00.00 to be replaced Motor to be replaced
Turnstile is not returned to central (initial) position during access	Position/speed sensor is installed improperly Wire between sensor and controller is damaged Position/speed sensor is out of order	Position/speed sensor to be installed or printed board to be replaced Wires to be changed Contacts in receptacle to be checked

4.3 Postrepair checkout

The turnstile performance to be checked after repair according to paragraph 2.3.2 of this OM.

5 TRANSPORTATION AND STORAGE

5.1 Turnstile storage

It is forbidden to subject the turnstile to jerks and impacts during storage. Transportation trolleys to be used for handling of the turnstile. In storage facilities there should not be aggressive gases and vapours causing metal corrosion.

Air temperature during storage should not be below $+5^0$ C and above $+40^0$ C and relative air humidity should not be more than 80% at the temperature 20° C.

5.2 Turnstile transportation

The ready-to-install turnstile to be transported according to the transportation regulations related to the relevant mode of transport, such as:

- in railway or special containers;
- in closed vehicles;
- waterborne (in ship's hold) .

Transportation on open platforms is allowed. In this case the packed turnstile to be covered with canvas. Air temperature during transportation should not be below -40°C and above +50°C. After transportation or storage of the turnstile at negative temperatures or increased humidity the turnstile to be kept indoor with normal climatic conditions without original packing within 12 hours before commissioning:

1) ambient temperature: + 15°C to +35°C;
2) relative humidity: 45% to 80 %;
3) atmospheric pressure: 84,0 to 106,7kPa (630-800 mm Hg).

6 DISPOSAL

The turnstile design does not contain materials environmentally hostile and hazardous to human health and special measures are not required for its disposal.

7 MANUFACTURER'S WARRANTY AND TERMS OF WARRANTY MEAINTENANCE

7.1. The manufacturer guarantees good state and declared quality of the turnstile if conditions of transportation, storage, installation and operation are observed by the consumer.

7.2. The turnstile warranty period is 12 months from the date of sale, unless otherwise specified by delivery contract.

7.3 During the warranty period the Manufacturer shall undertake to perform repair or replacement within 10 days (at the discretion of Manufacturer) of the failed turnstile or its parts having proven factory defects (not due to nonobservance of storage, transportation, installation and operation conditions specified by this OM) preventing further use of the turnstile.

7.4 The Manufacturer shall not bear responsibility and warranty liabilities for the consequences (damage) due to nonobservance of the conditions specified by this OM.

7.5 The Manufacturer's warranty liabilities are valid only if sections 3, 4, 5 of the Data Sheet and warranty coupon are completed as well as the relevant signatures and seals are available. The turnstile to be repaired only by the authorized service center of the manufacturer with use of exclusively original spare parts. The warranty liabilities shall not include free-of-charge arrival of technical staff to the Customer for repair.

7.6 The relationships between the Manufacturer and the Customer under the warranty liabilities to be regulated by the applicable law of Ukraine, concluded purchase contracts and these warranty liabilities.

"TiSO-PRODUCTION" LTD
14 Promyshlennaya str., 02088 Kiev, Ukraine
Tel.: +38 (044) 291-21-01
Tel../Fax: +38 (044) 291-21-02
E-mail: trade@tiso.global, sales@tiso.global
WEB www.tiso.global

SERVICE CENTER
e-mail: service1@tiso.global

Our equipment complies with requirements of the European Standards: EN ISO 12100:2010; EN 614-1:2006+A1:2009; EN 1037:1995+A1:2008; EN 60204-1:2006; EN 953:1997+A1:2009; ISO 3864:1995; EN ISO 13857:2008; EN ISO 13849-1:2006; EN 1088:1995; EN ISO 13732-1:2008

and is in conformity with requirements of the following EC Directives: 2014/30/EC; 2014/35/EC; 2006/42/ EC

The manufacturer's quality management system has been certified according to the International Standard ISO 9001: 2015 - Certificate No. HU14 / 7373.03.

QR code to be used to download the Operation Manual via Internet.

Annex A

(mandatory)

Design, overall and installation dimensions of the "CENTURION-M" type turnstile

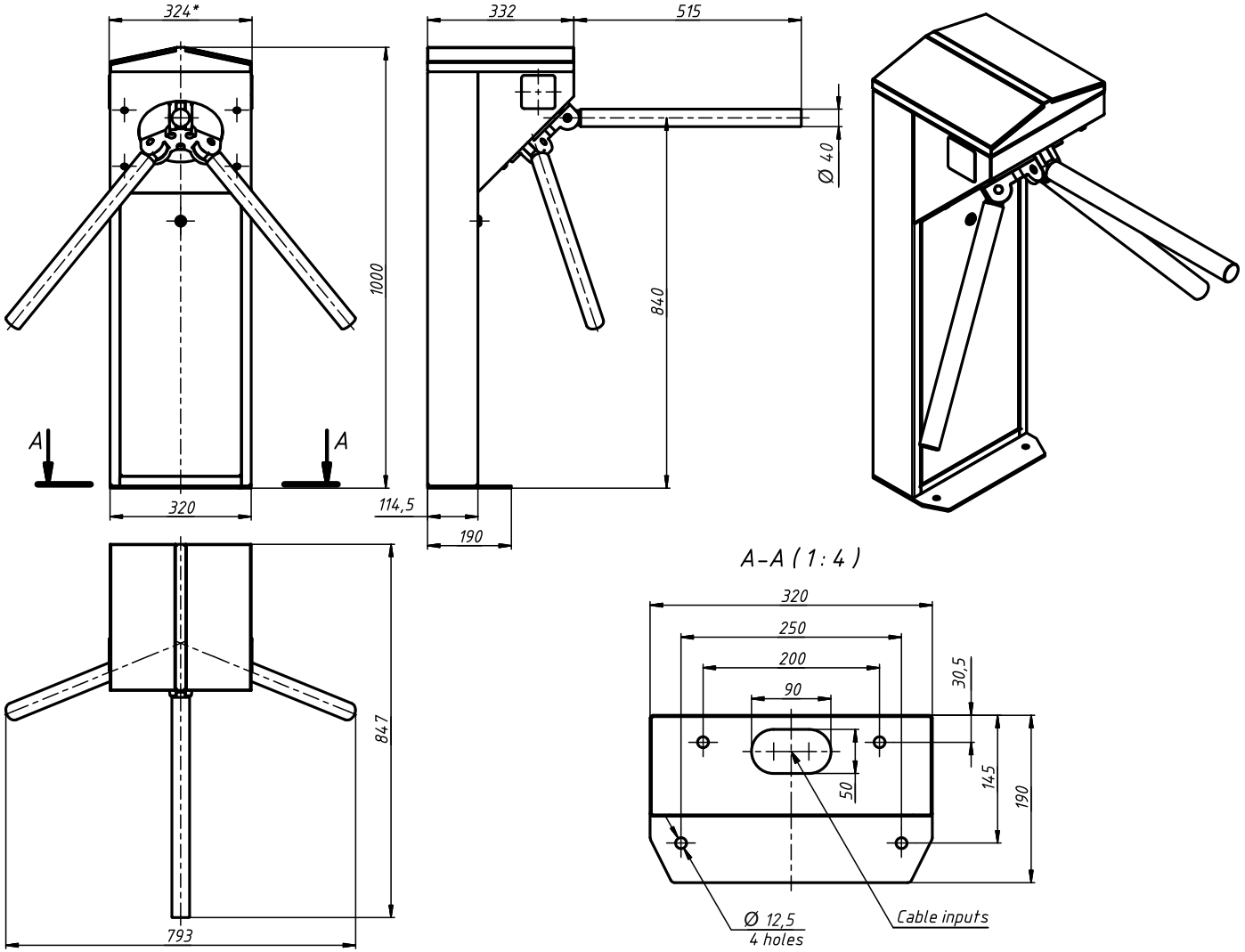

Figure A.1 – Tripod turnstile "CENTURION-M"

Continued Annex A

(mandatory)

Design, overall and installation dimensions of the turnstile "BASTION-M"

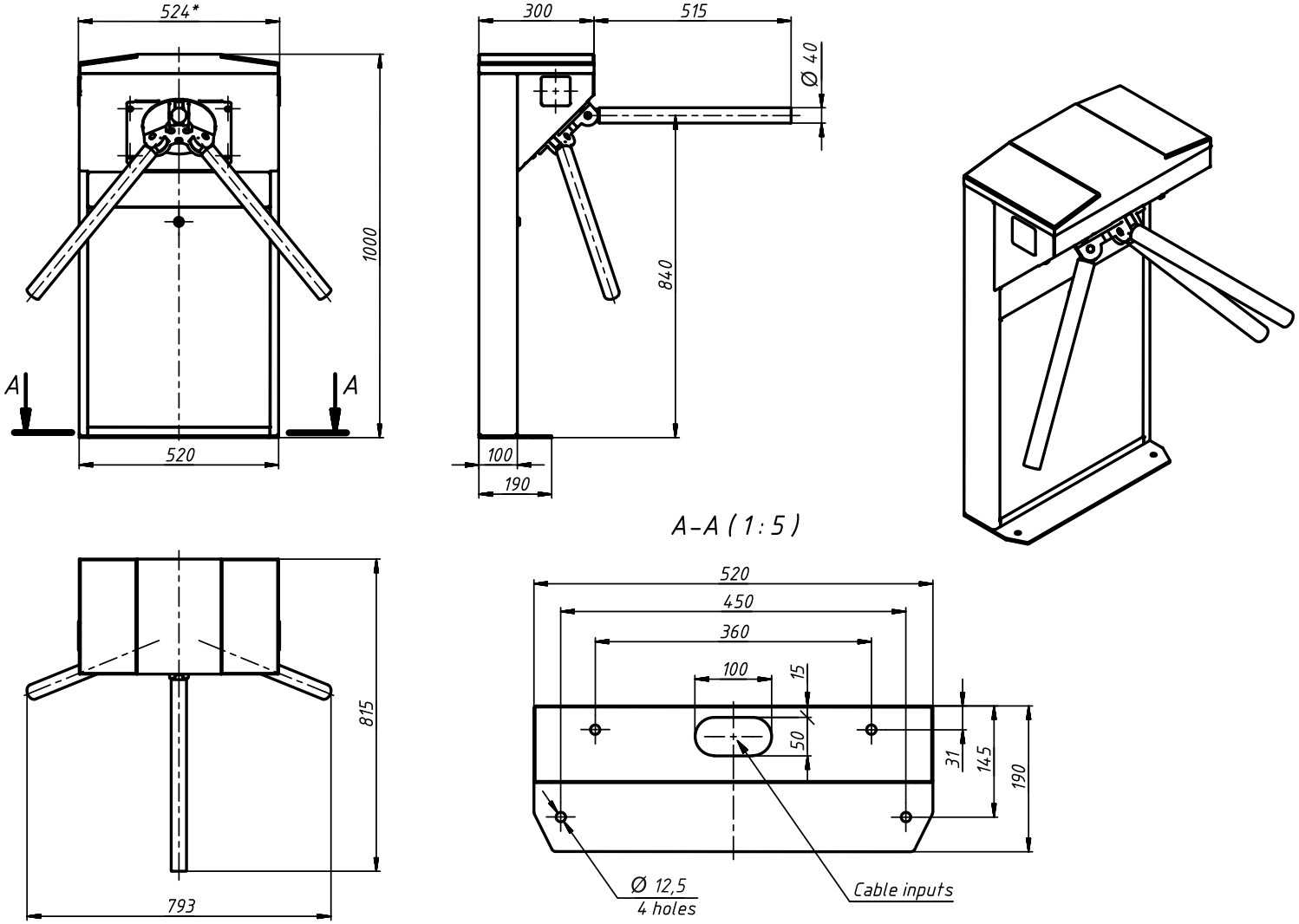

Figure A.2 – Tripod turnstile "BASTION-M"

Continued Annex A

(mandatory)

Design, overall and installation dimensions of the turnstile "SKULL-M"

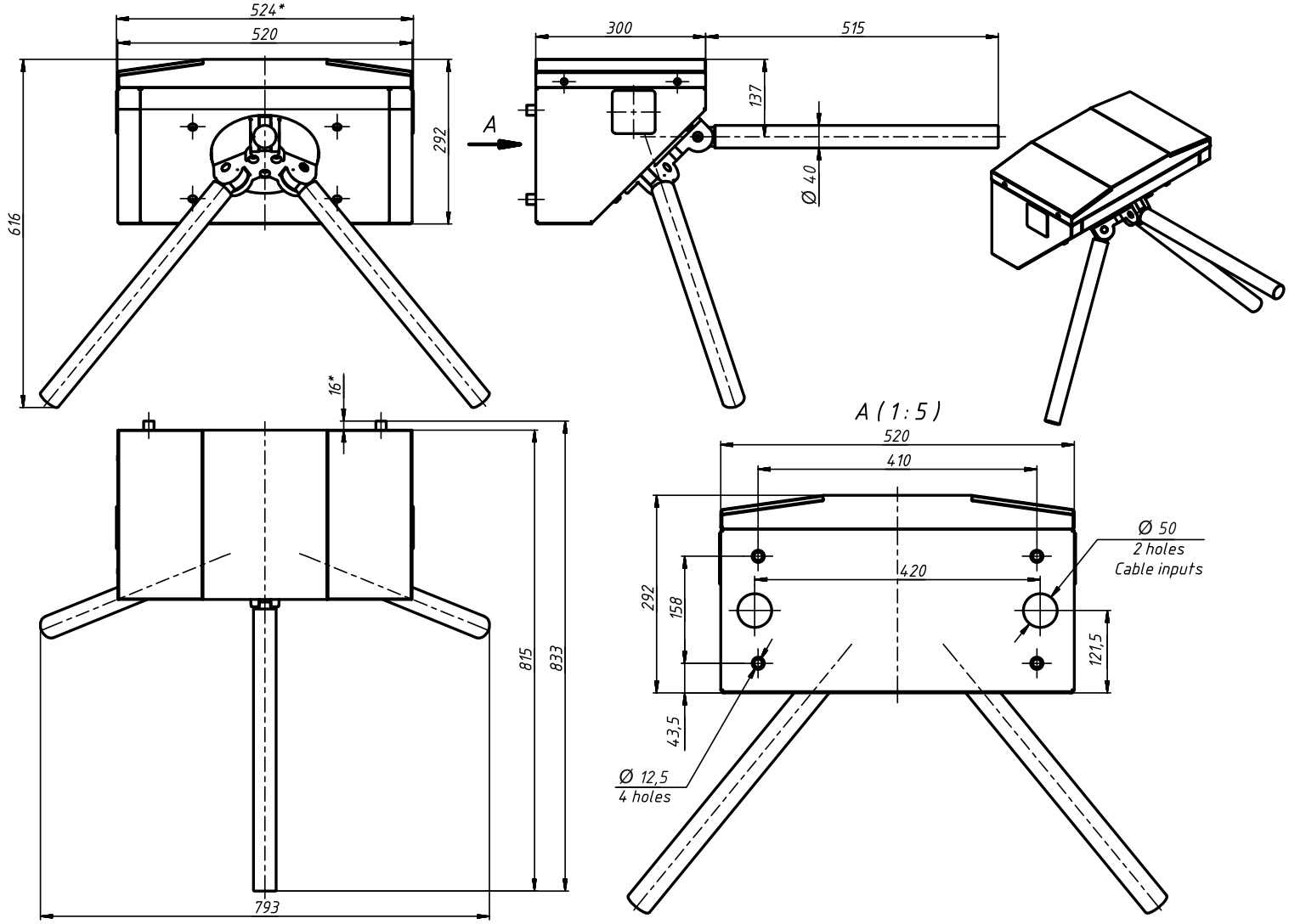

Figure A.3 – Tripod turnstile "SKULL-M"

Continued Annex A

(mandatory)

Design, overall and installation dimensions of the turnstile "TWIX-M"

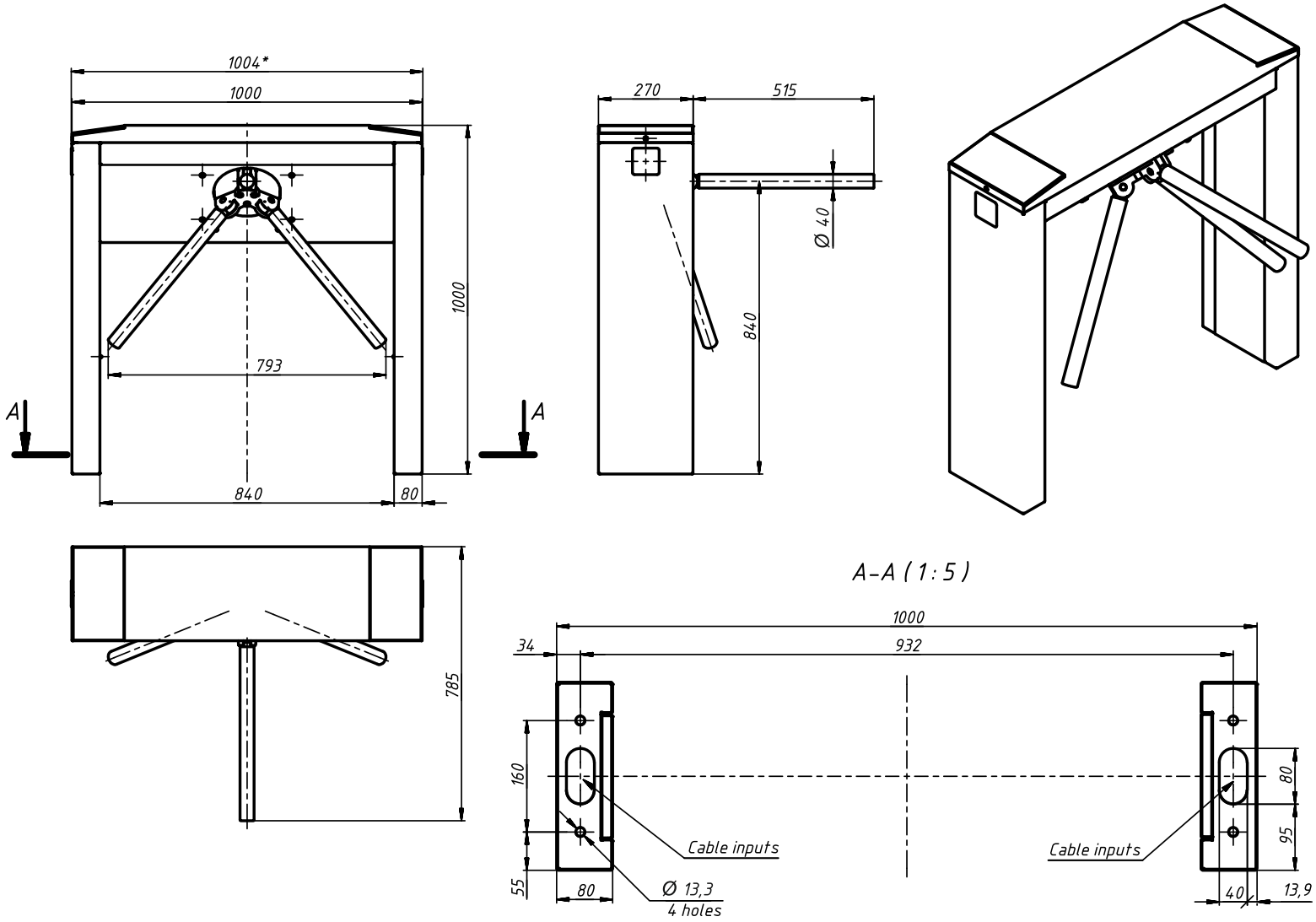

Figure A.4 – Tripod turnstile "TWIX-M"

Annex B

(mandatory)

Control panel and connection diagram

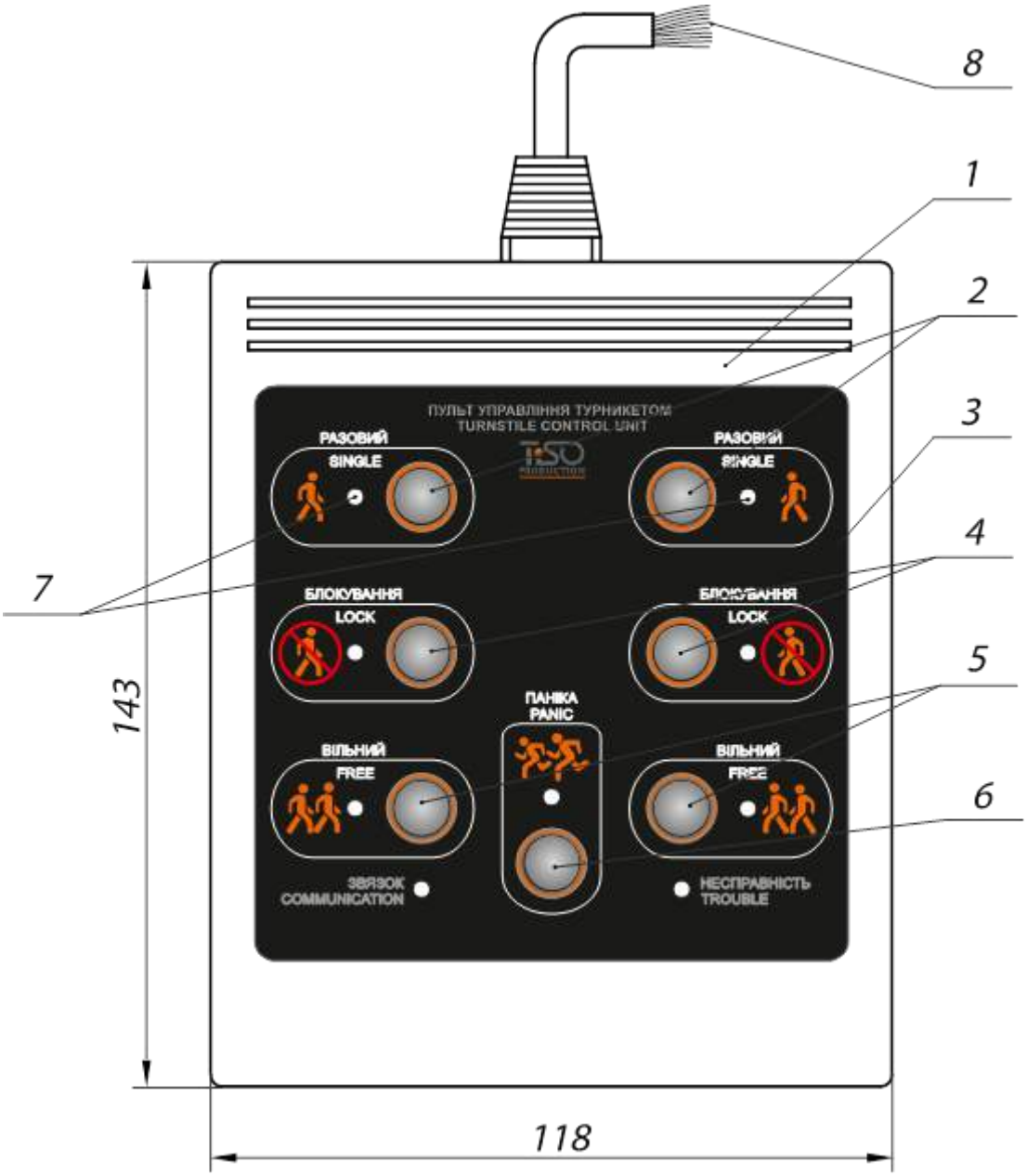

1 – control panel housing;
2 – "SINGLE ACCESS" mode control button
3 – front plate;
4 – "LOCK" mode control button;
5 – "FREE ACCESS" mode control button;
6 – "PANIC" mode control button;
7 – access direction LED display;
8 – controller connection terminals

Figure B.1 – Control panel AUIA.114.02.00.00

Continued Annex B

Control panel and connection diagram

Figure B.2 – Control panel AUIA.114.02.00.00 connection diagram

Annex C
(mandatory)

Servo-operated tripod turnstile wiring diagram

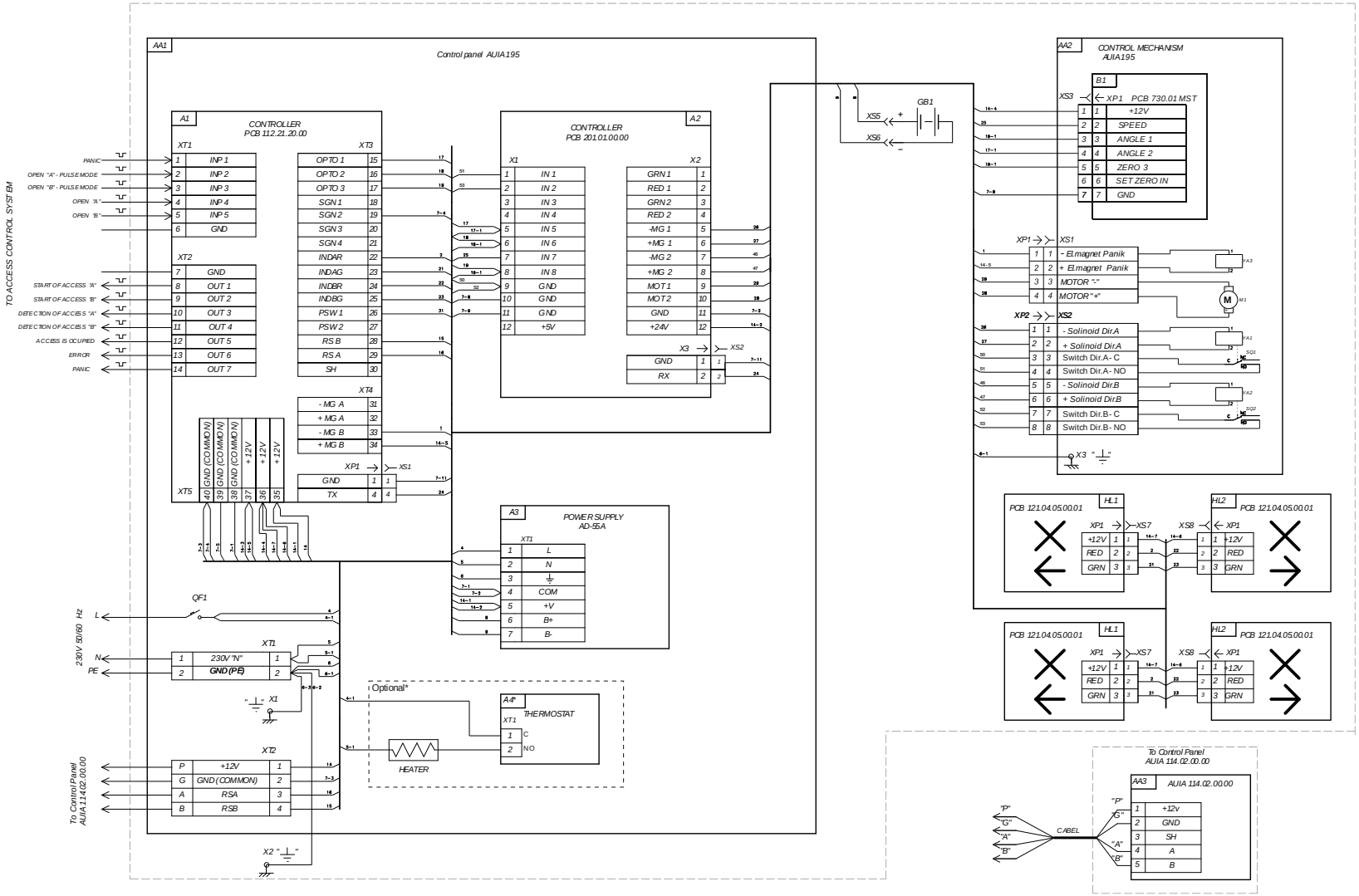

Figure C.1 – Turnstile wiring diagram

Annex D.1

(mandatory)

Wiring diagram of the turnstile connection to access control system (ACS) in pulse mode

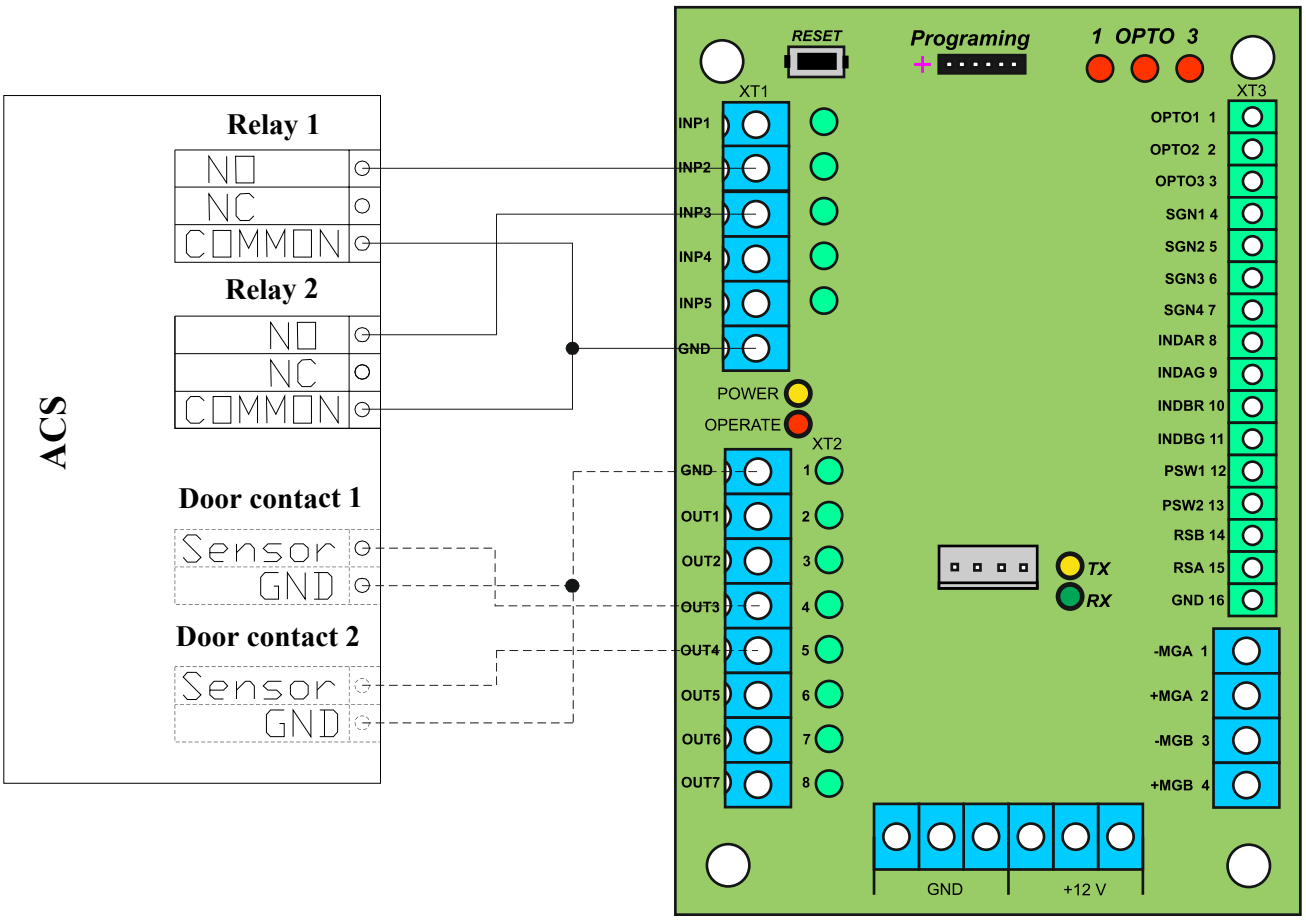

inp1- "PANIC"
inp2- "TO BE OPENED A" in pulse mode. When command is issued entry is activated for 5 sec.
inp3- " TO BE OPENED B" in pulse mode. When command is issued entry is activated for 5 sec.
inp4- "TO BE OPENED A". Entry is activated for the time of keeping in active state
inp5- " TO BE OPENED B". Entry is activated for the time of keeping in active state
GND- "-" of power supply (common wire)

out3 - "DETECTION OF ACCESS A"
out4 - "DETECTION OF ACCESS B"
} ***Signal is generated by controller when rotor is rotating from 64° to 120° in the relevant direction***

Figure D.1 – Wiring diagram of the turnstile connection to ACS

Annex D.2

(mandatory)

Wiring diagram of the turnstile connection to access control system (ACS) in hold mode

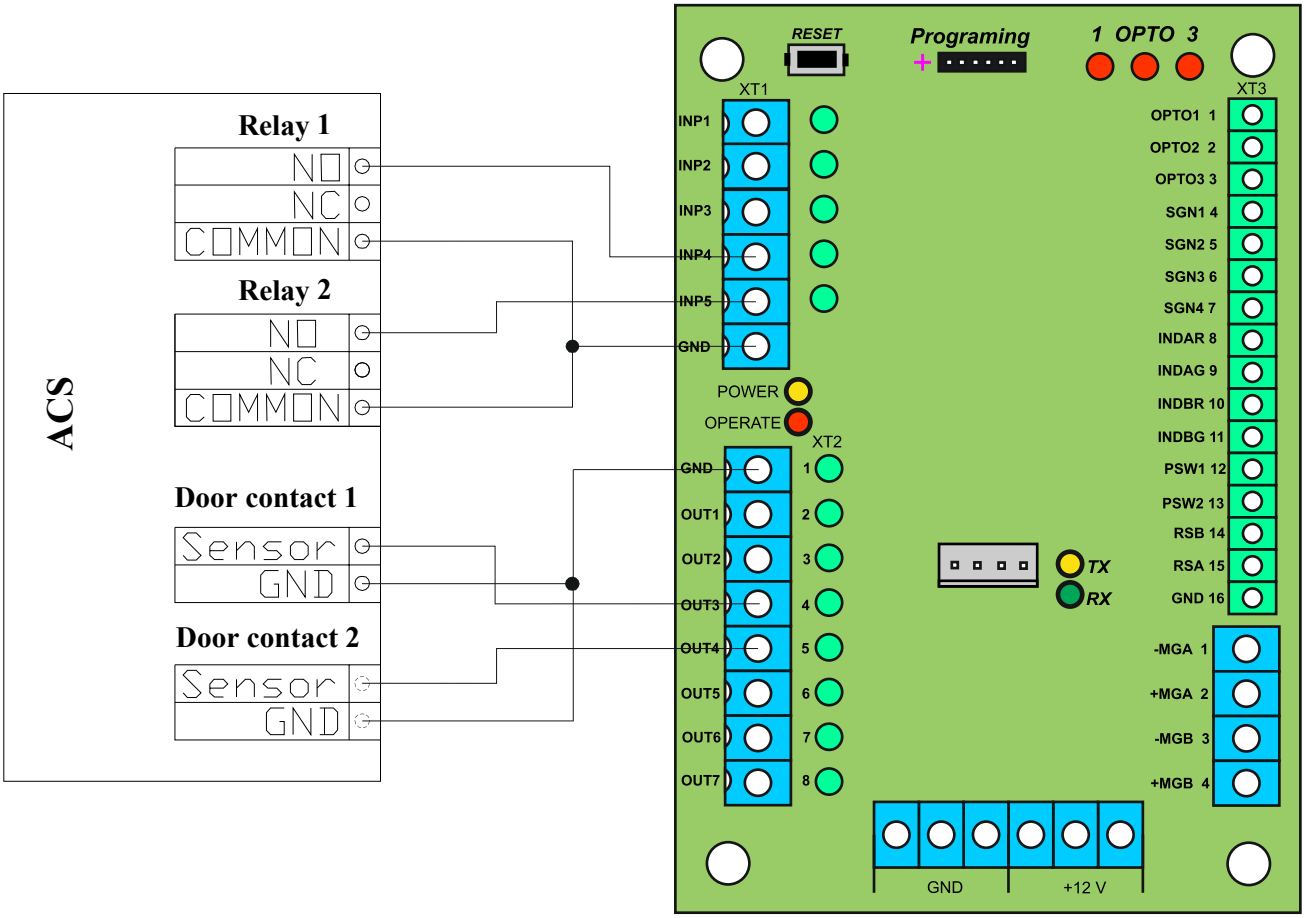

inp1- "PANIC"
inp2- "TO BE OPENED A" in pulse mode. When command is issued entry is activated for 5 sec.
inp3- " TO BE OPENED B" in pulse mode. When command is issued entry is activated for 5 sec.
inp4- "TO BE OPENED A". Entry is activated for the time of keeping in active state
inp5- " TO BE OPENED B". Entry is activated for the time of keeping in active state
GND- "-" of power supply (common wire)

out3 - "DETECTION OF ACCESS A"
out4 - "DETECTION OF ACCESS B"
} ***Signal is generated by controller when rotor is rotating from 64° to 120° in the relevant direction***

Figure D.2 – Wiring diagram of the turnstile connection to ACS

Annex D.3

(mandatory)

Wiring diagram of the turnstile connection to fire alarm system (FAS)

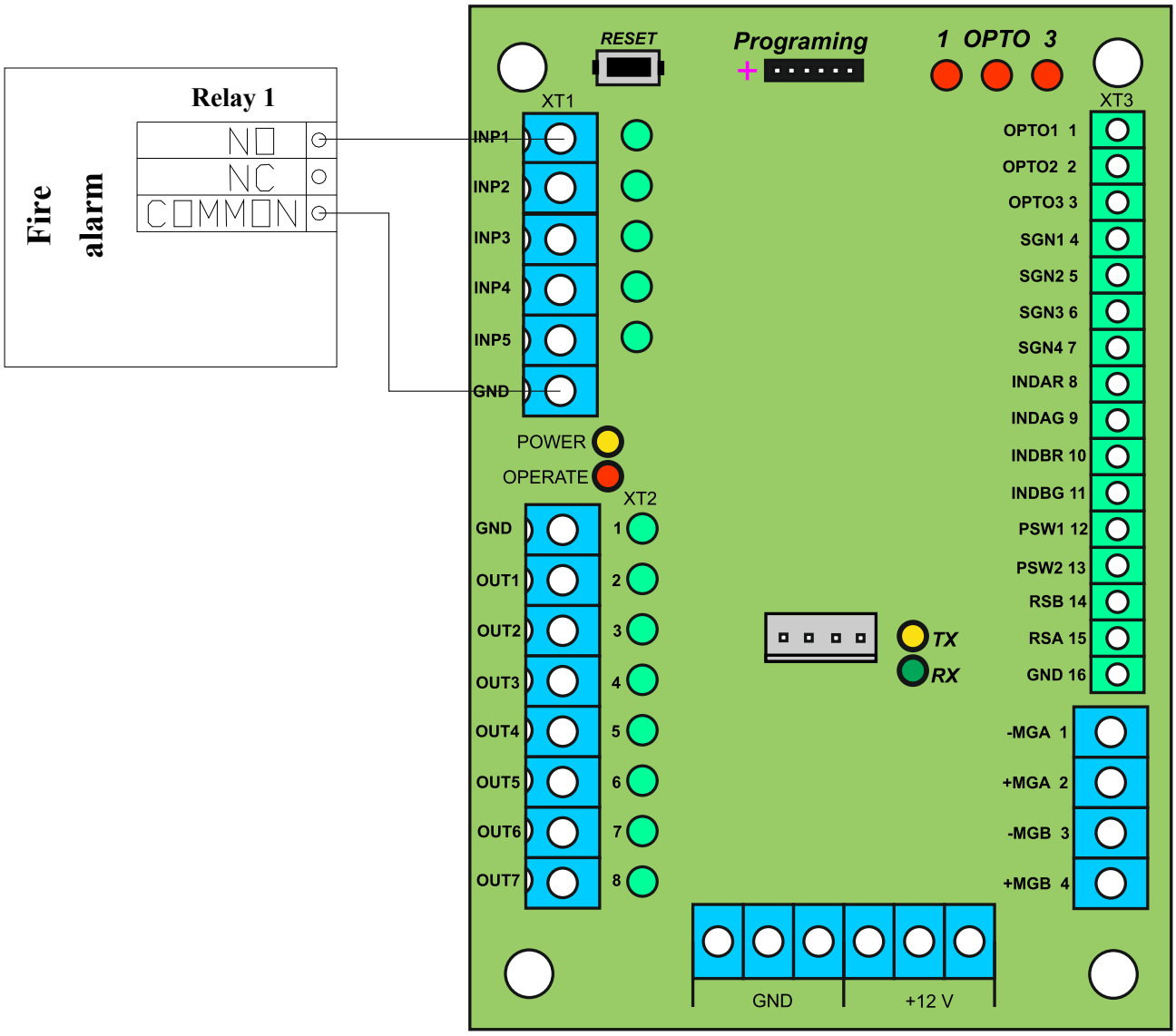

inp1- "PANIC"
inp2- "TO BE OPENED A" in pulse mode. When command is issued entry is activated for 5 sec.
inp3- " TO BE OPENED B" in pulse mode. When command is issued entry is activated for 5 sec.
inp4- "TO BE OPENED A". Entry is activated for the time of keeping in active state
inp5- " TO BE OPENED B". Entry is activated for the time of keeping in active state
GND- "-" of power supply (common wire)

out3 - "DETECTION OF ACCESS A"
out4 - "DETECTION OF ACCESS B"
} ***Signal is generated by controller when rotor is rotating from 64° to 120° in the relevant direction***

Figure D.3 – Wiring diagram of the turnstile connection to fire alarm system (FAS)

Annex D.4

(mandatory)

Wiring diagram of the turnstile connection to fire alarm system (FAS)

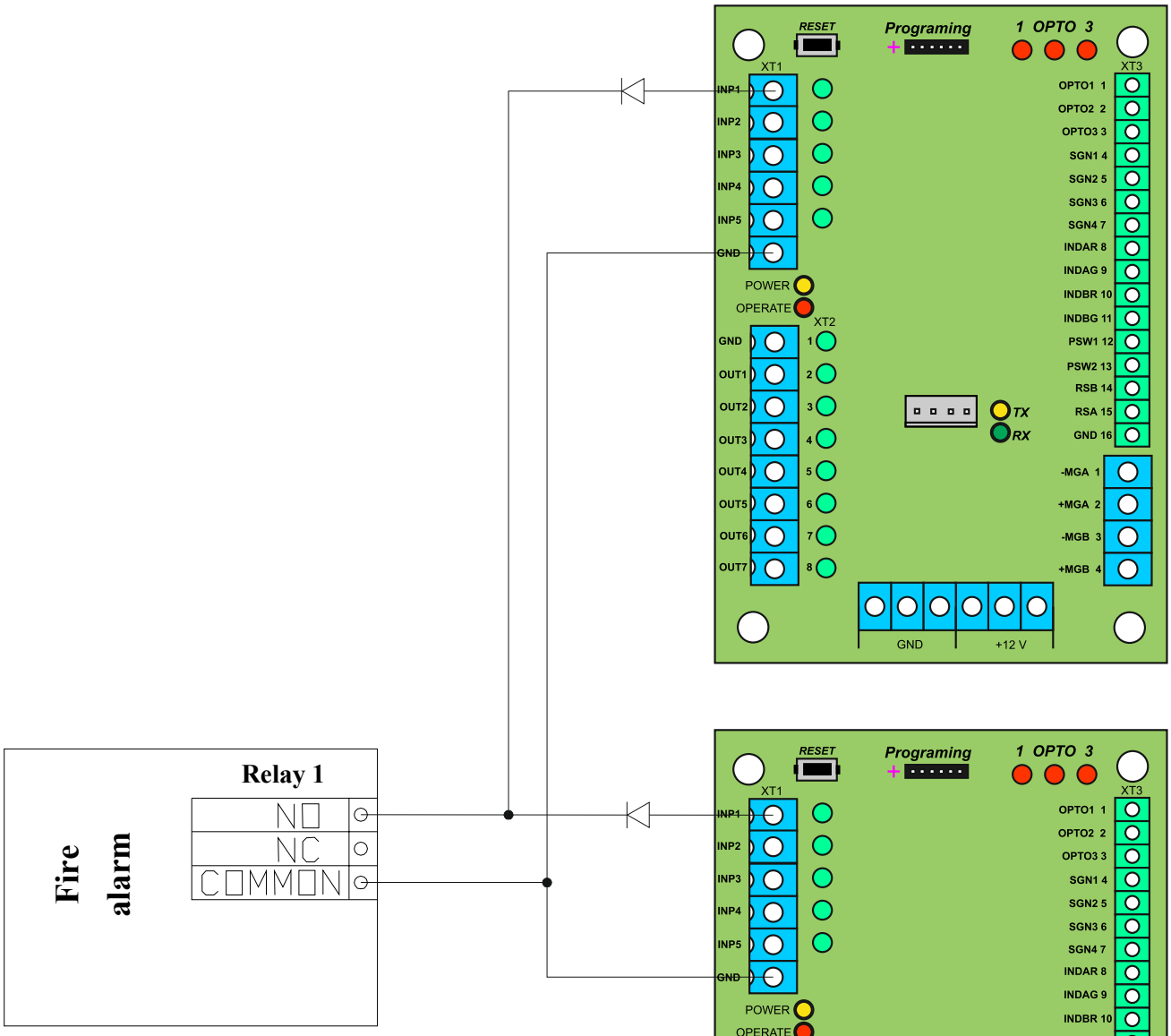

inp1- "PANIC"
inp2- "TO BE OPENED A" in pulse mode. When command is issued entry is activated for 5 sec.
inp3- " TO BE OPENED B" in pulse mode. When command is issued entry is activated for 5 sec.
inp4- "TO BE OPENED A". Entry is activated for the time of keeping in active state
inp5- " TO BE OPENED B". Entry is activated for the time of keeping in active state
GND- "-" of power supply (common wire)

out3 - "DETECTION OF ACCESS A"
out4 - "DETECTION OF ACCESS B"
} ***Signal is generated when the second to last along the path IR barrier is obscured and lasts 0,2 sec.***

Figure D.4 – Wiring diagram of the turnstile connection to fire alarm system (FAS)

Annex D.5

(mandatory)

Wiring diagram of the turnstile connection to control panel

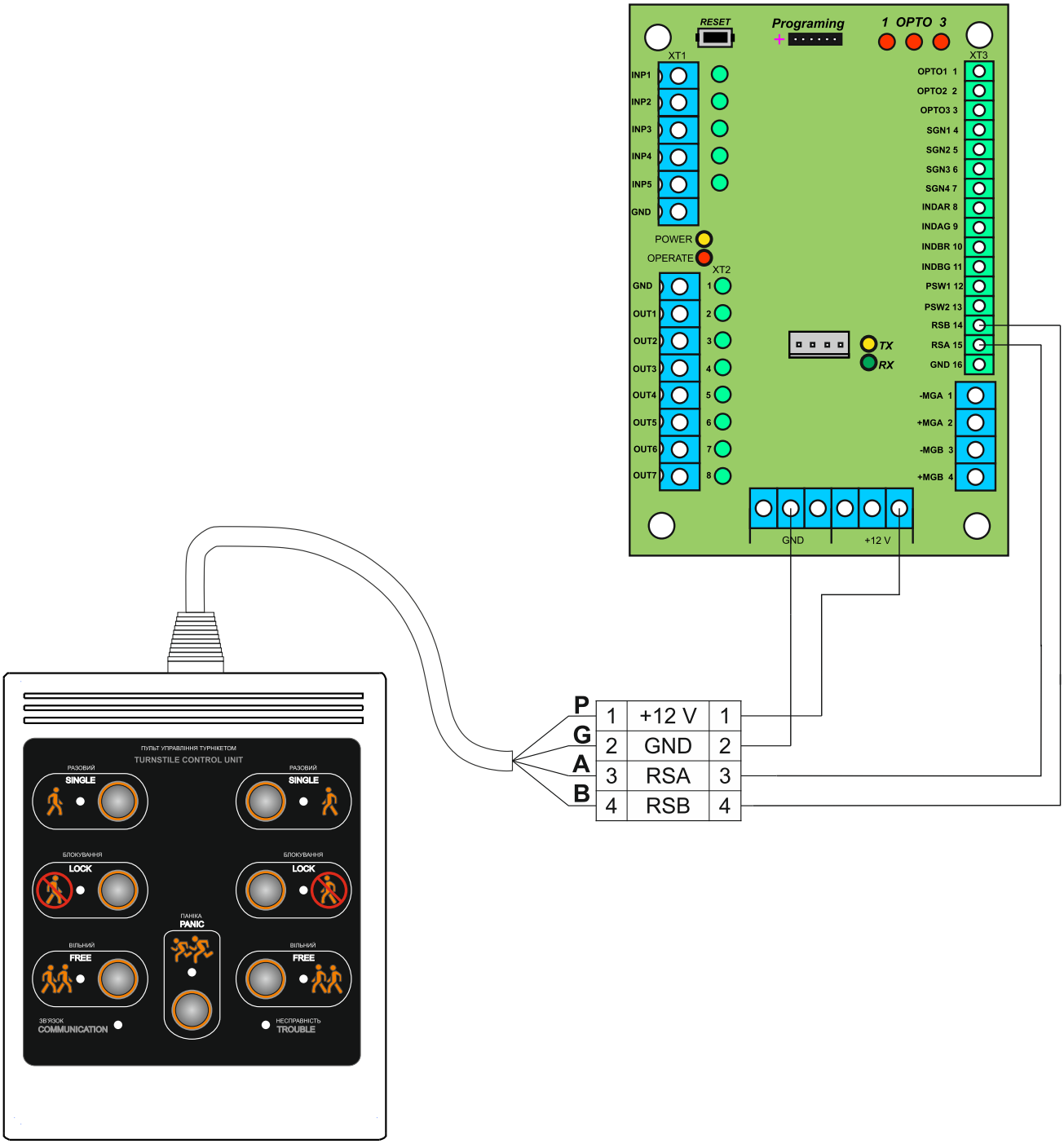

Figure D.5 – Wiring diagram of the turnstile connection to control panel